Kajaria Tiles
AUSTRALIA

QBISA
QUALITY BUILDING & INDUSTRIAL SUPPLIES AUSTRALIA

KITCHEN AND BATHWARE

CATALOGUE

QUALITY STYLE INNOVATION

2026



www.kajariatiles.com.au



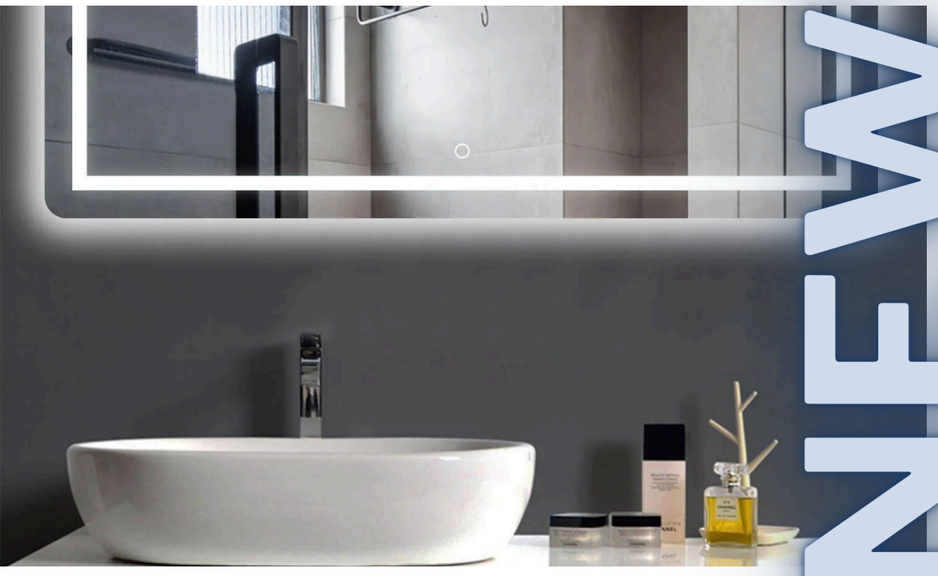



NEW COLLECTION







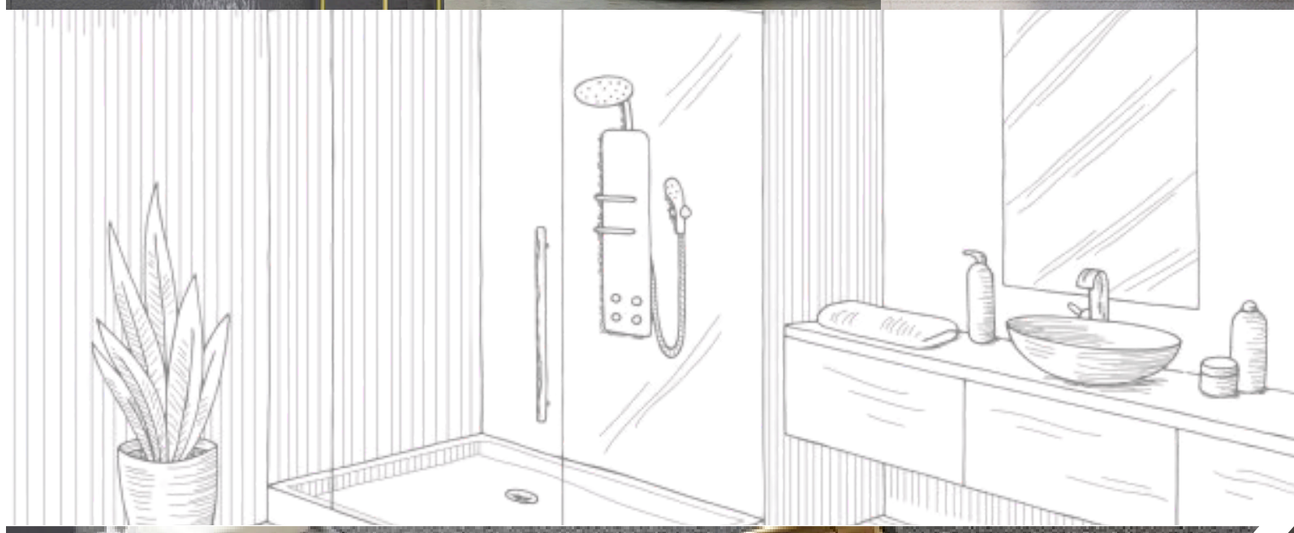



CONTENTS

BASINS 4

FAUCETS 12

SHOWER SETS 37

ACCESSORIES 44

BATHTUBS 50

TOILETS 58

KITCHEN AND LAUNDRY SINKS 66

LED MIRRORS 73

DESIGN THAT RESONATES, QUALITY THAT ENDURES

Discover a new level of elegance with our bath and kitchen range, where sleek design intersects with precise craftsmanship. Each piece is curated to enhance modern living with seamless style and lasting performance. Our range is ideal for transforming ordinary spaces into striking showcases of contemporary sophistication.



***Please note that all our products are WaterMarked.**

For detailed specifications, please visit our website or contact our sales team at *info@kajariatiles.com.au*



BASINS







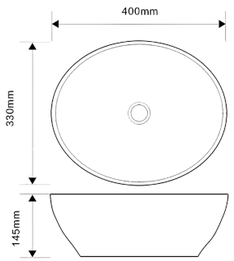

Countertop Basin (Glossy White)

SKU: Q-9020A

Size: 400x330x145mm



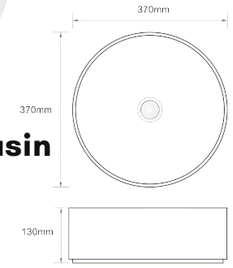

Round Countertop Basin (Glossy White)

SKU: Q-9721

Size: 370x370x130mm





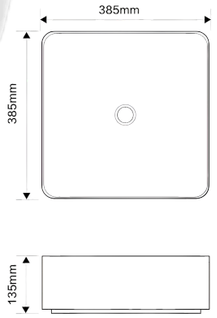

Countertop Basin (Glossy White)

SKU: Q-9390

Size: 385x385x135mm



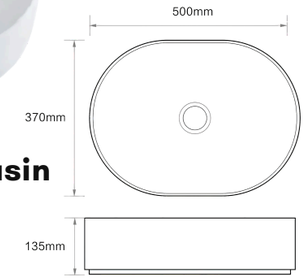

Countertop Oval Basin (Glossy White)

SKU: Q-9720A

Size: 500x370x135mm



Square Countertop Basin (Glossy White)

SKU: Q-9662

Size: 375x375x130mm

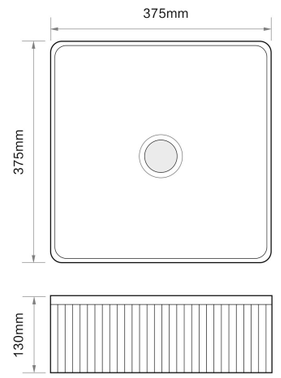



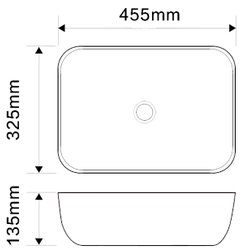

Countertop Basin (Glossy White)

SKU: Q-9387B

Size: 455x325x135mm



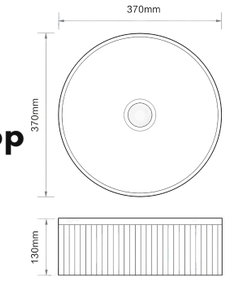

Round Fluted Countertop Basin (Glossy White)

SKU: Q-9660

Size: 370x370x130mm



Rectangle Countertop Basin (Glossy White)

SKU: Q-9663

Size: 500x340x130mm

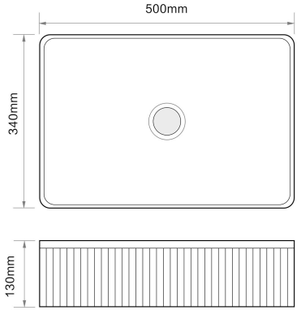



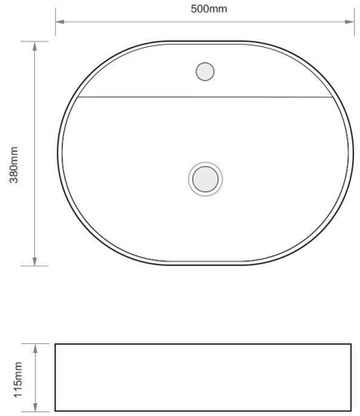

Above Counter Basin
(Glossy White)

SKU: Q-9469A

Size: 500x380x110mm



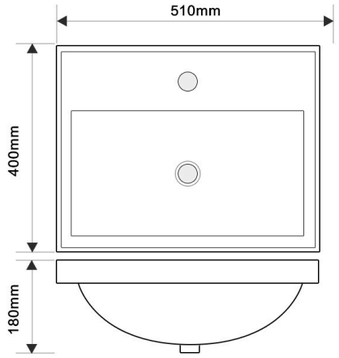

Semi-Countered Basin
(Glossy White)

SKU: Q-6030

Size: 510x400x180mm



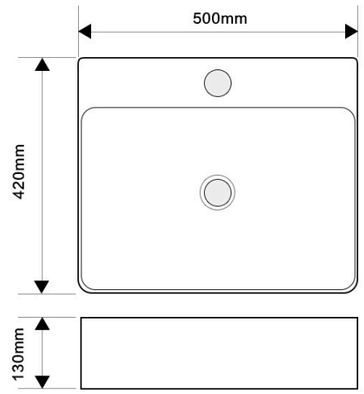

Countertop Basin
(Glossy White)

SKU: Q-9554

Size: 500x420x130mm







Countertop Oval Fluted Basin (Glossy White)

SKU: Q-9726

Size: 490x310x130mm

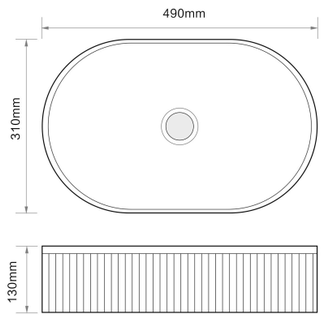





Fluted Oval Countertop Basin (Matt Black)

SKU: Q-9744 M-001

Size: 5500x360x150mm

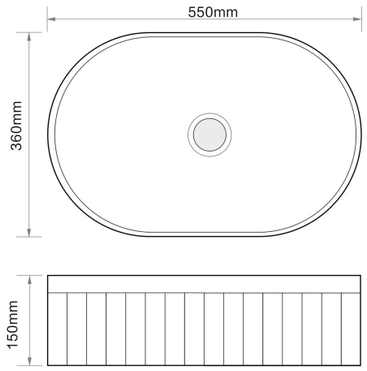



Oval Marble Basin (White)

SKU: Q-9720A P-438

Size: 500x370x135mm

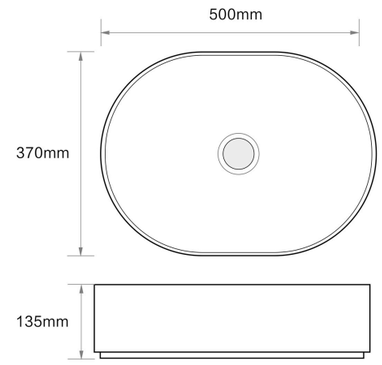



Fish Scale Oval Countertop Basin (Glossy White)

SKU: Q-9727

Size: 550x360x135mm

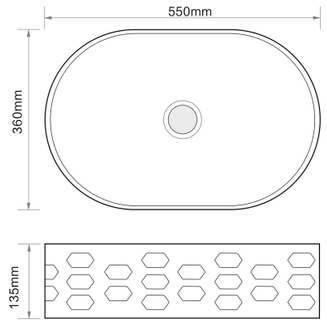



Fluted Gold Rim Round Basin

SKU: Q-9538 E-115

Size: 365x365x125mm

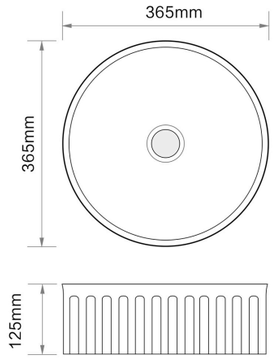





Black and White Rectangle Countertop Basin

SKU: Q-9103B C-001

Size: 480x370x130mm

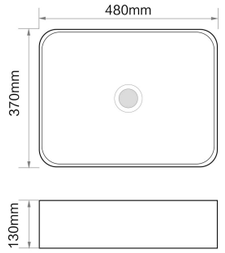



Black and White Countertop Basin

SKU: Q-9387B C-002

Size: 455x325x135mm

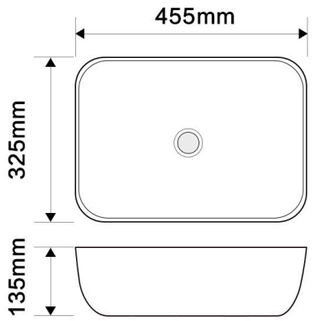

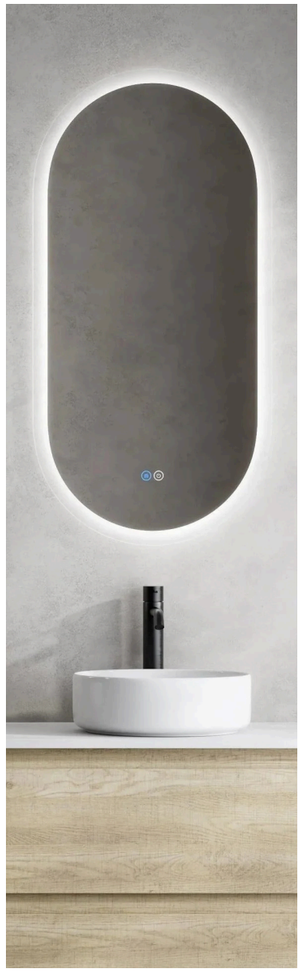



Countertop Basin (Glossy Forest Green)

SKU: Q-9020A-G012

Size: 400x330x145mm

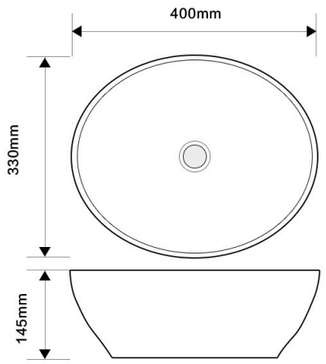



Countertop Basin (Matt Black)

SKU: Q-9611 M-001

Size: 510x370x120mm

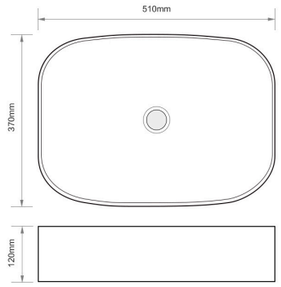



Round Countertop Basin (Glossy Blue)

SKU: Q-9514B M-005

Size: 365x365x125mm

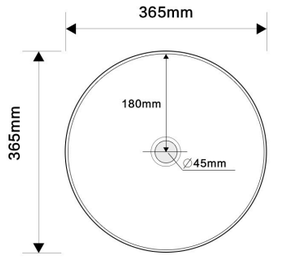

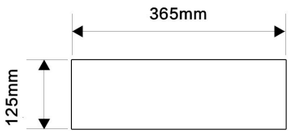



Round Countertop Basin (Glossy Black)

SKU: Q-9514B G-001

Size: 365x365x125mm



Round Countertop Basin (Glossy Grey)

SKU: Q-9514B G-004

Size: 365x365x125mm



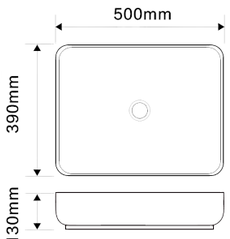

Marble Basin (White)

SKU: Q-9391B P-131

Size: 500x390x130mm



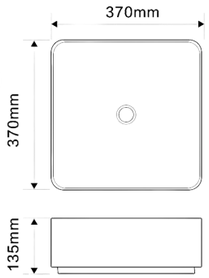

Square Marble Basin (White)

SKU: Q-9672 P-400

Size: 370x370x135mm



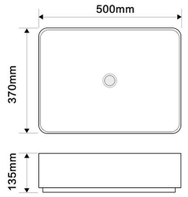

Rectangle Marble Basin (White)

SKU: Q-9674 P-307

Size: 500x370x135mm



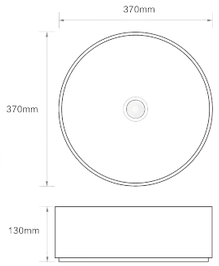

Round Marble Basin (White)

SKU: Q-9721 P-441

Size: 370x370x130mm



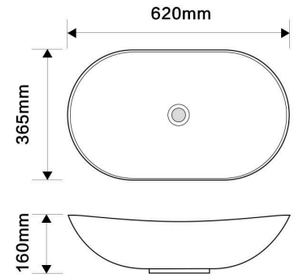

Marble Basin (White)

SKU: Q-9497C P-162

Size: 620x365x160mm



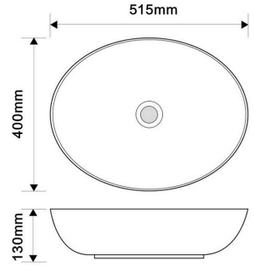

Oval Marble Basin (Black)

SKU: Q-9399 P-398

Size: 515x400x130mm



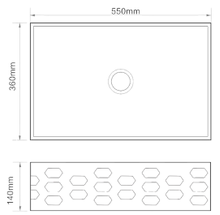

Fish Scale Rectangle Countertop Basin (Glossy White)

SKU: Q-9728

Size: 550x360x140mm



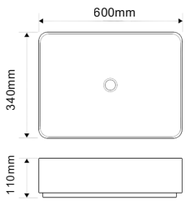

Rectangle Marble Basin (White)

SKU: Q-9396 P-155

Size: 600x340x110mm



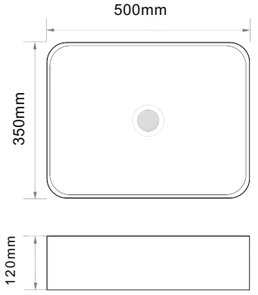

Rectangle Marble Basin (Black)

SKU: Q-9636 P-213

Size: 500x350x120mm



Crystal Basin

SKU: Q-DH801-CL-36

Size: 360x360x112mm



Crystal Basin (Blue)

SKU: Q-DH802A-PBLB

Size: 530x350x150mm



Crystal Basin (Gold)

SKU: Q-BDH802B-DTHT

Size: 510x350x150mm



Crystal Basin (Black)

SKU: Q-DH813A-PGB-36

Size: 360x360x112mm



Crystal Basin (Black)

SKU: Q-DH806-DYH-36

Size: 360x360x112mm



Electroplated Gold Basin

SKU: Q-9745-E-230

Size: 400x400x135mm



Wash Basin

SKU: Q-6483-57H04

Size: 570x360x160mm



Wash Basin

SKU: Q-6483-57H01

Size: 570x360x160mm







DRAIN PLUGS



UNIVERSAL POP-UP DRAIN PLUG (CHROME)
SKU: Q-NX-C107-CP



UNIVERSAL POP-UP DRAIN PLUG (GUN METAL)
SKU: Q-NX-C107-GM



UNIVERSAL POP-UP DRAIN PLUG (BRUSHED GOLD)
SKU: Q-NX-C107-BG



UNIVERSAL POP-UP DRAIN PLUG (BLACK)
SKU: Q-NX-C107-MB



UNIVERSAL POP-UP DRAIN PLUG (WHITE)
SKU: Q-NX-C107-CP-W

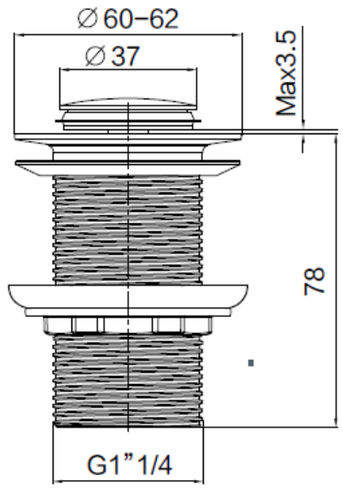





FAUCETS

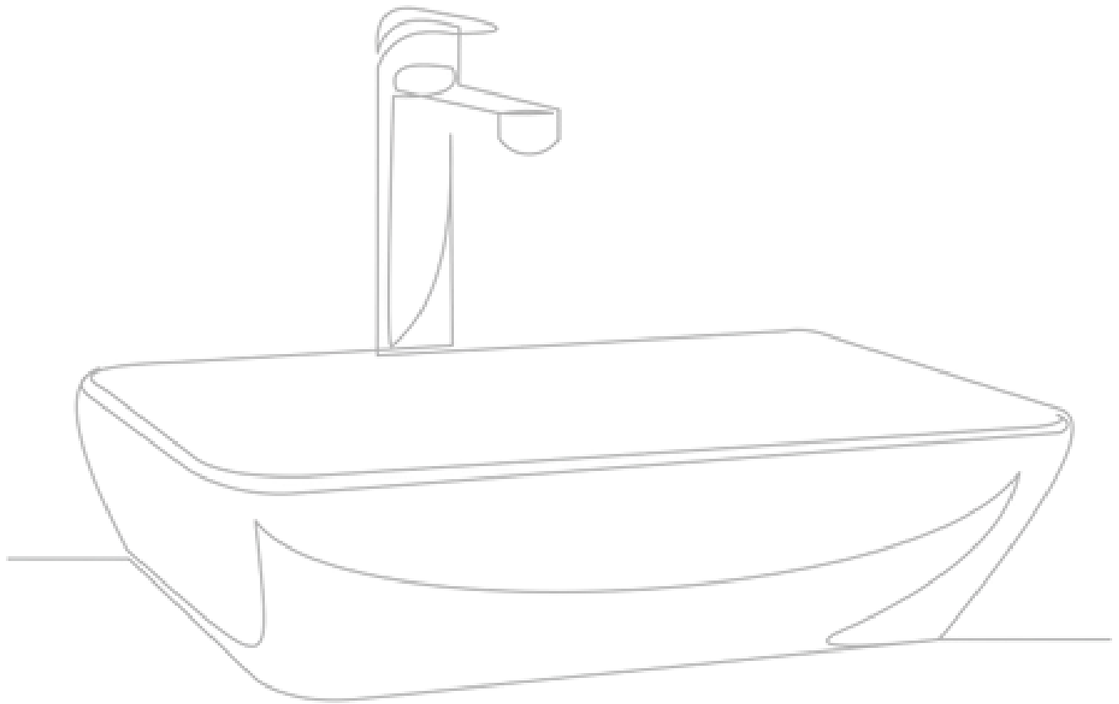





BASIN FAUCET

MATERIAL: BRASS

COLD AND HOT WATER FUNCTION

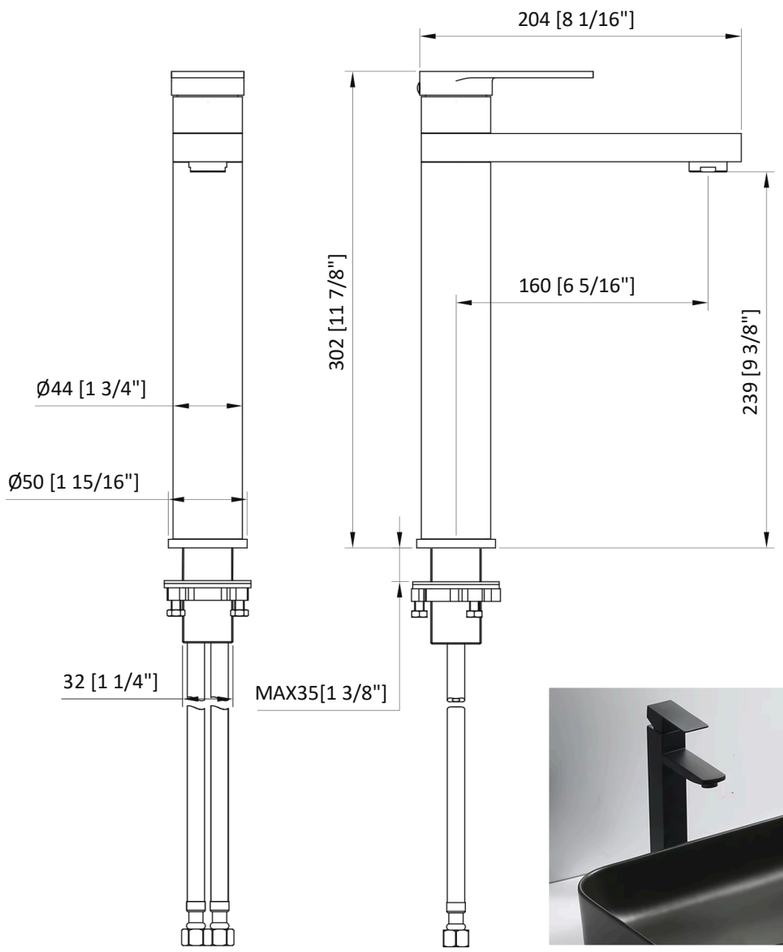





Basin Faucet
(Chrome)
SKU: Q-81H74T-CHR



Basin Faucet
(Matt Black)
SKU: Q-81H74T-MB



Basin Faucet
(Gunmetal)
SKU: Q-81H74T-GM

BASIN FAUCET

MATERIAL: BRASS

COLD AND HOT WATER FUNCTION

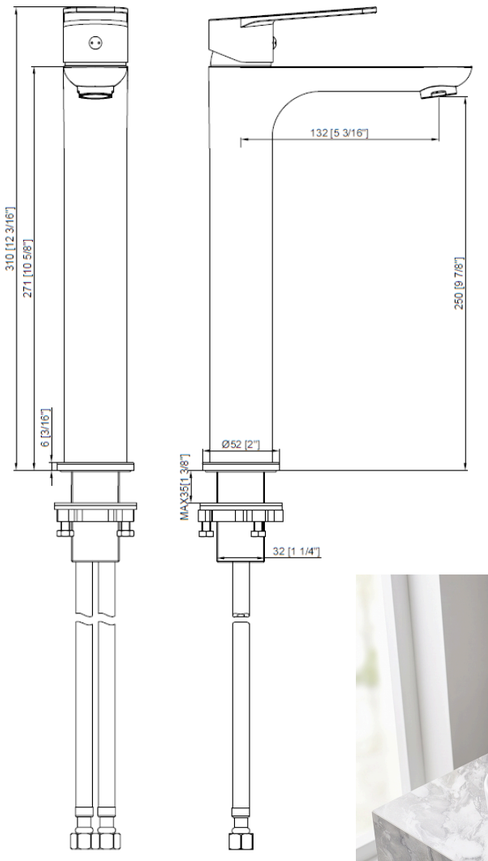





WaterMark

Rounded Tall Basin Faucet (Chrome)
SKU: Q-81H09T-CHR



WaterMark

Rounded Tall Basin Faucet (Matt Black)
SKU: Q-81H09T-MB



WaterMark

Rounded Tall Basin Faucet (Gunmetal)
SKU: Q-81H09T-GM

BASIN FAUCET

MATERIAL: BRASS

COLD AND HOT WATER FUNCTION





Short Basin Faucet (Chrome)
SKU: Q-81H79-CHR



Short Basin Faucet (Gunmetal)
SKU: Q-81H79-GM



Short Basin Faucet (Matt Black)
SKU: Q-81H79-MB



Short Basin Faucet (Brushed Brass)
SKU: Q-81H79-SB

BASIN FAUCET

MATERIAL: BRASS

COLD AND HOT WATER FUNCTION

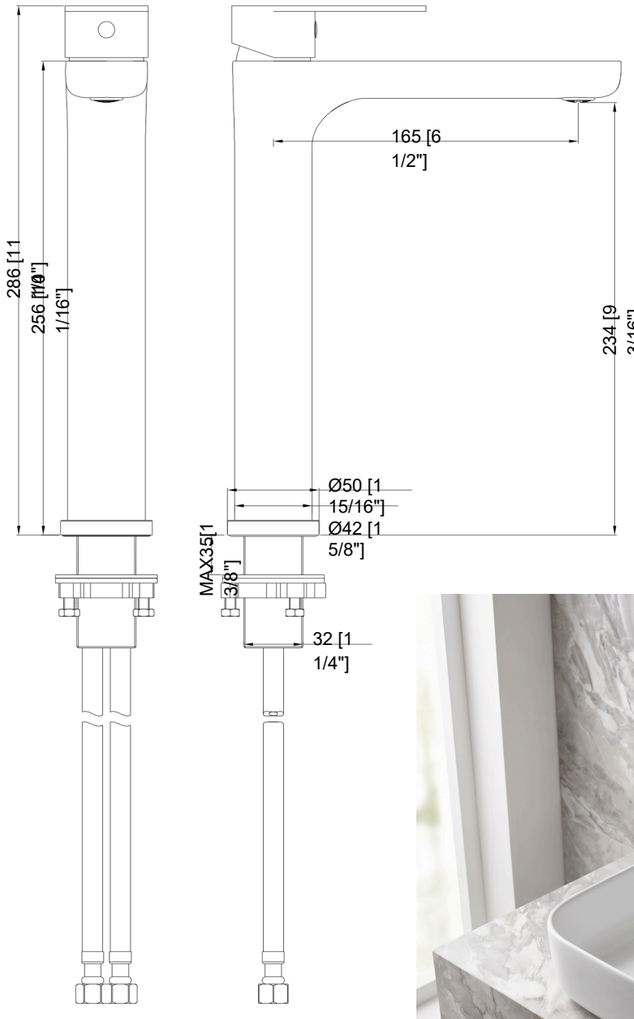





Tall Basin Faucet
(Brushed Nickel)
SKU: Q-81H79T-BN



Tall Basin Faucet
(Brushed Brass)
SKU: Q-81H79T-SB

MATERIAL: STAINLESS STEEL

COLD AND HOT WATER FUNCTION

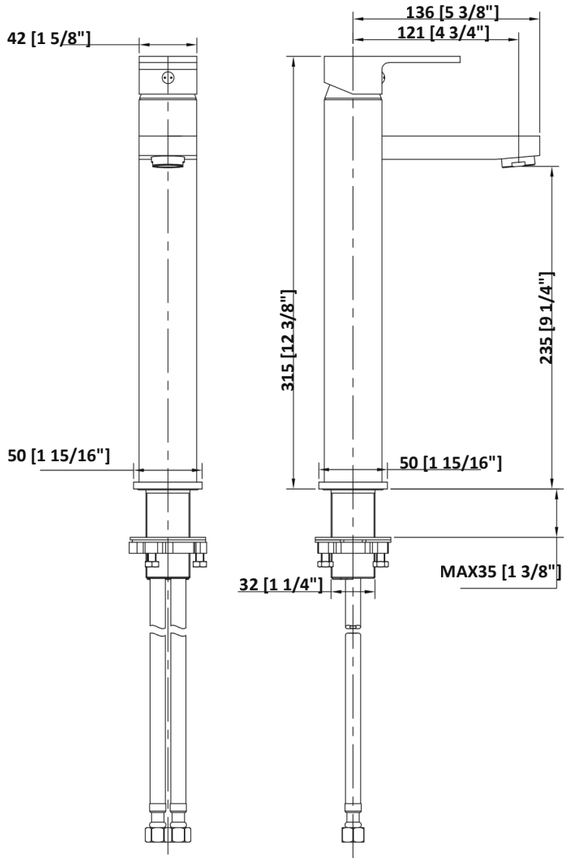





Tall Square Basin Faucet (Chrome)
SKU: Q-81H57T-CHR

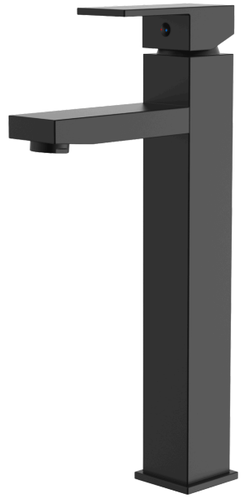

Tall Square Basin Faucet (Matt Black)
SKU: Q-81H57T-MB

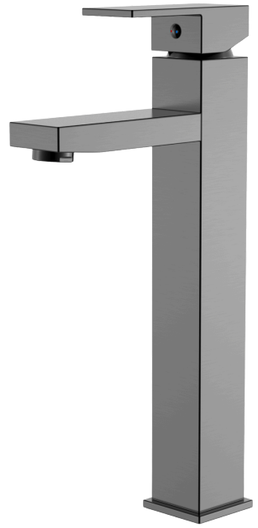

Tall Square Basin Faucet (Gunmetal)
SKU: Q-81H57T-GM

MATERIAL: STAINLESS STEEL

COLD AND HOT WATER FUNCTION



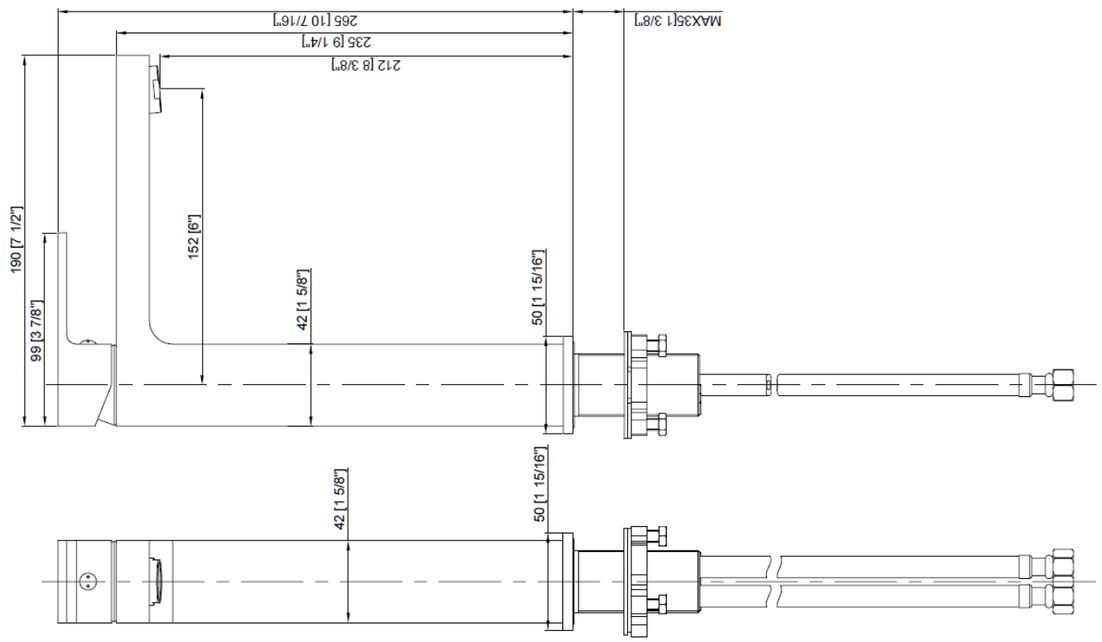



Short Basin Faucet (Chrome)
SKU: Q-81H55T-CHR



Short Basin Faucet (Gunmetal)
SKU: Q-81H55T-GM



Short Basin Faucet (Brushed Nickel)
SKU: Q-81H55T-BN



Short Basin Faucet (Matt Black)
SKU: Q-81H55T-MB



Short Basin Faucet (Brushed Brass)
SKU: Q-81H55T-SB



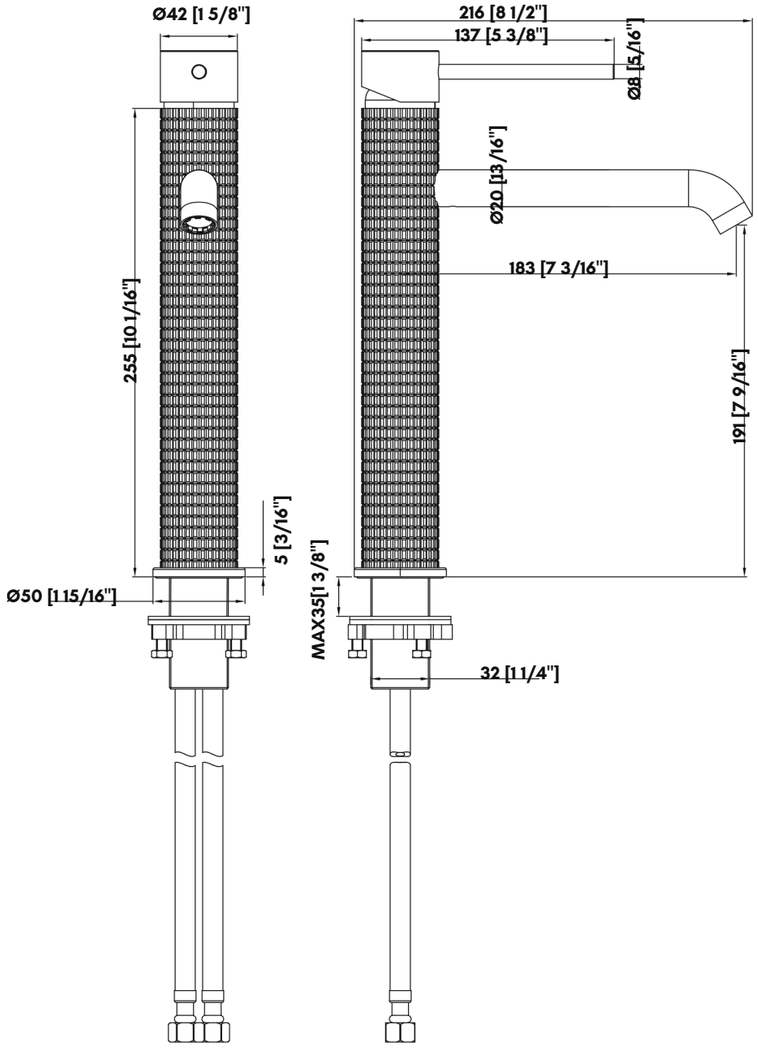

BASIN FAUCET

Hot and Cold Water Function
Material: Brass

Q-81H80T-CHR



BASIN FAUCET

Hot and Cold Water Function
Material: Brass

Q-81H80T-GM



BASIN FAUCET

Hot and Cold Water Function
Material: Brass

Q-81H80T-MB



BASIN FAUCET

Hot and Cold Water Function
Material: Brass

Q-81H80T-SB



WALL MOUNTED BASIN TAPS

MATERIAL: STAINLESS STEEL

COLD AND HOT WATER FUNCTION

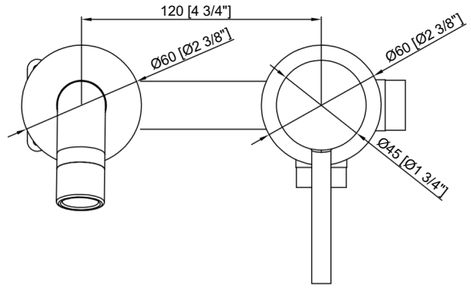

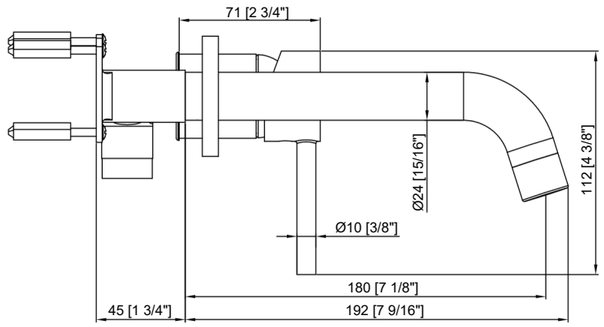





Wall Mounted Basin Tap (Chrome)
SKU: Q-86H80-CHR



Wall Mounted Basin Tap (Brushed Nickel)
SKU: Q-86H80-BN



Wall Mounted Basin Tap (Matt Black)
SKU: Q-86H80-MB



Wall Mounted Basin Tap (Gunmetal)
SKU: Q-86H80-GM



Wall Mounted Basin Tap (Brushed Brass)
SKU: Q-86H80-SB

BATHROOM FAUCET

MATERIAL: STAINLESS STEEL

COLD AND HOT WATER FUNCTION

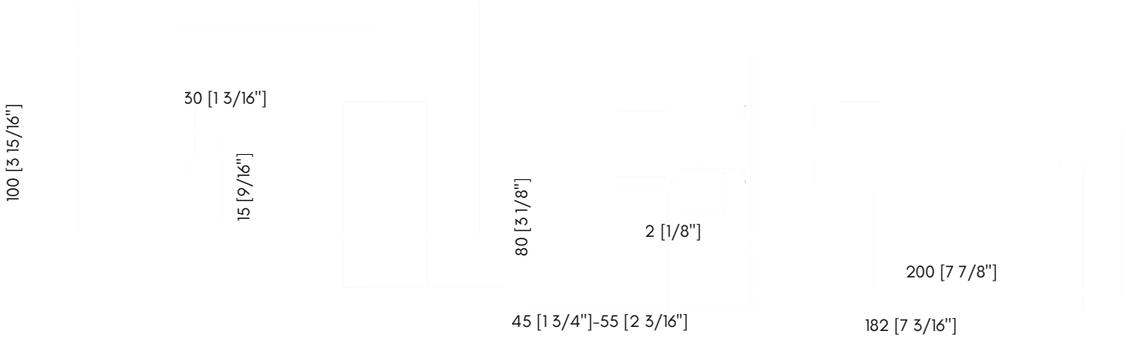





Bathroom Faucet (Chrome)
SKU: Q-86H06-CHR

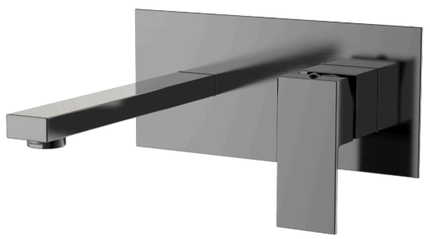

Bathroom Faucet (Gunmetal)
SKU: Q-86H06-GM

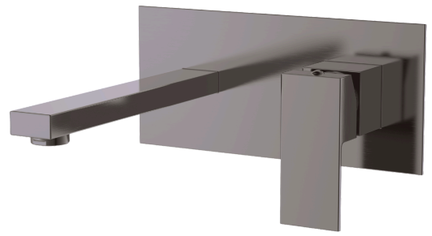

Bathroom Faucet (Brushed Nickel)
SKU: Q-86H06-BN

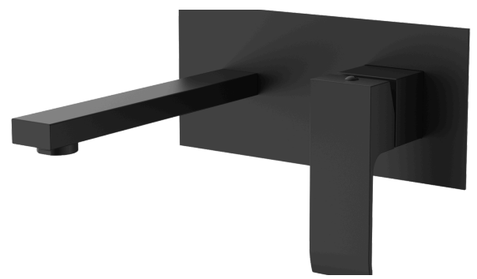

Bathroom Faucet (Matt Black)
SKU: Q-86H06-MB

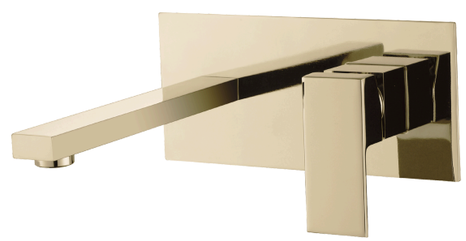

Bathroom Faucet (Brushed Brass)
SKU: Q-86H06-SB

BATHROOM FAUCET

MATERIAL: STAINLESS STEEL

COLD AND HOT WATER FUNCTION

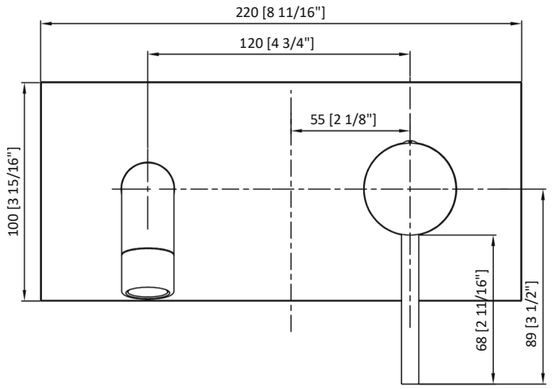

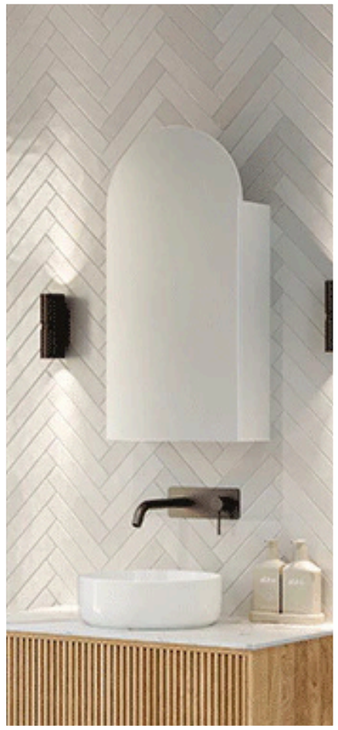

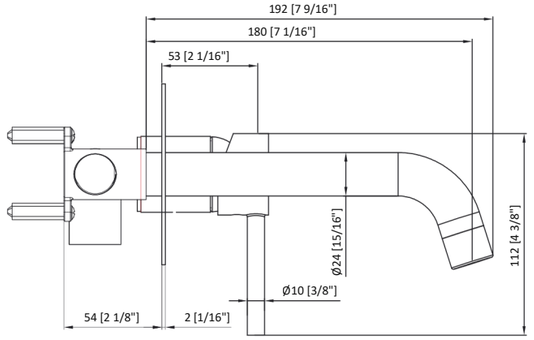



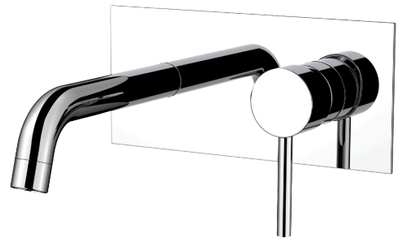

Bathroom Faucet (Chrome)
SKU: Q-86H81-CHR

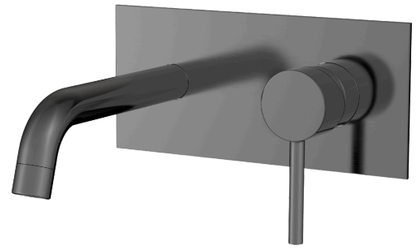

Bathroom Faucet (Gunmetal)
SKU: Q-86H81-GM

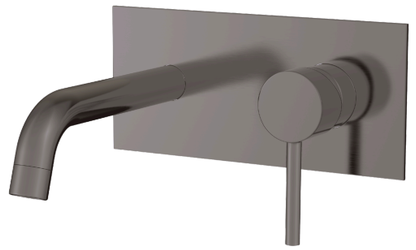

Bathroom Faucet (Brushed Nickel)
SKU: Q-86H81-BN

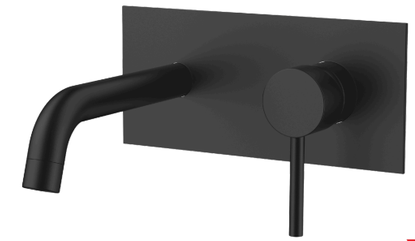

Bathroom Faucet (Matt Black)
SKU: Q-86H81-MB

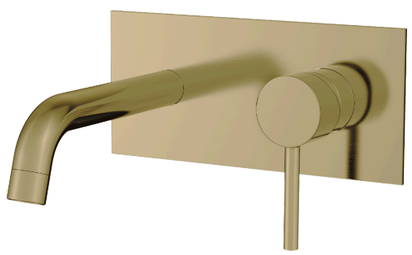

Bathroom Faucet (Gunmetal)
SKU: Q-86H81-GM

SPOUTS

MATERIAL: BRASS



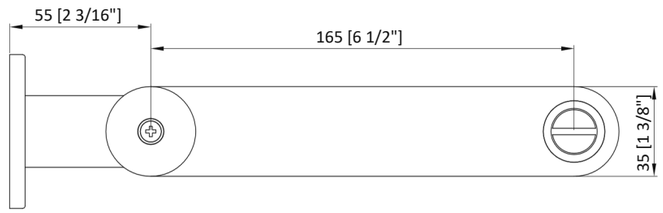

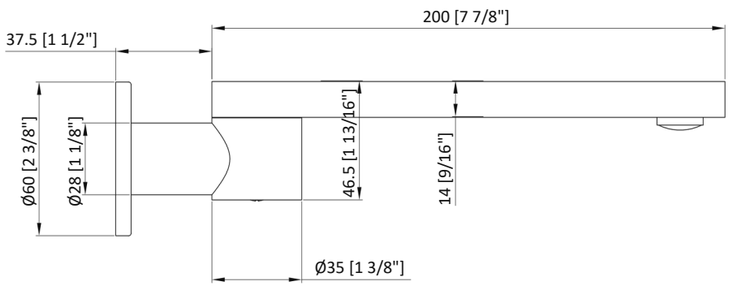





Round Spout
(Chrome)
SKU: Q-SP11-CHR

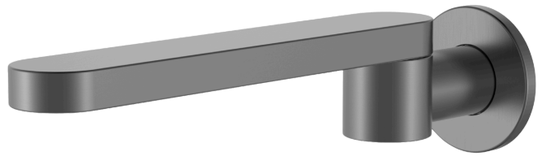

Round Spout
(Gunmetal)
SKU: Q-SP11-GM



Round Spout
(Matt Black)
SKU: Q-SP11-MB



Round Spout
(Brushed Brass)
SKU: Q-SP11-SB



Round Spout
(Brushed Nickel)
SKU: Q-SP11-BN

SPOUTS

MATERIAL: BRASS

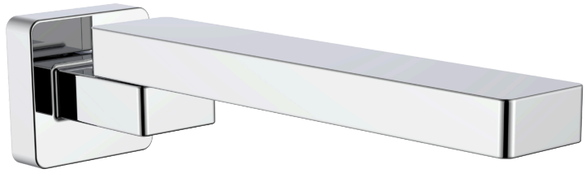

Square Spout
(Chrome)
SKU: Q-SP06-CHR

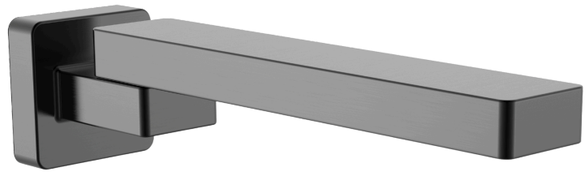

Square Spout
(Gunmetal)
SKU: Q-SP06-GM

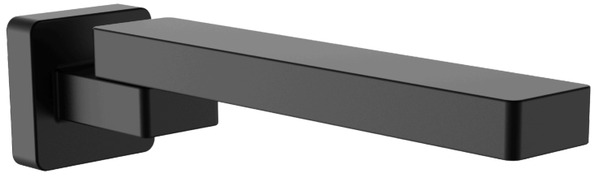

Square Spout
(Matt Black)
SKU: Q-SP06-MB

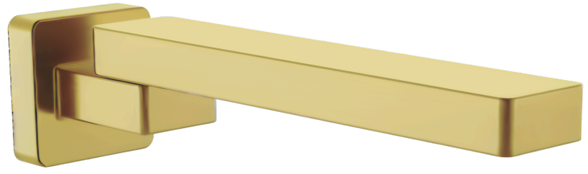

Square Spout
(Brushed Brass)
SKU: Q-SP06-SB

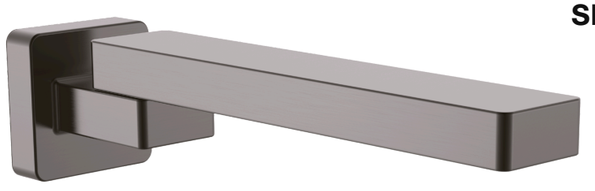

Square Spout
(Brushed Nickel)
SKU: Q-SP06-BN

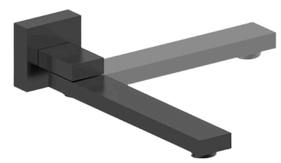



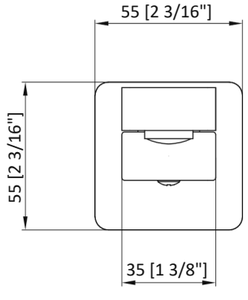

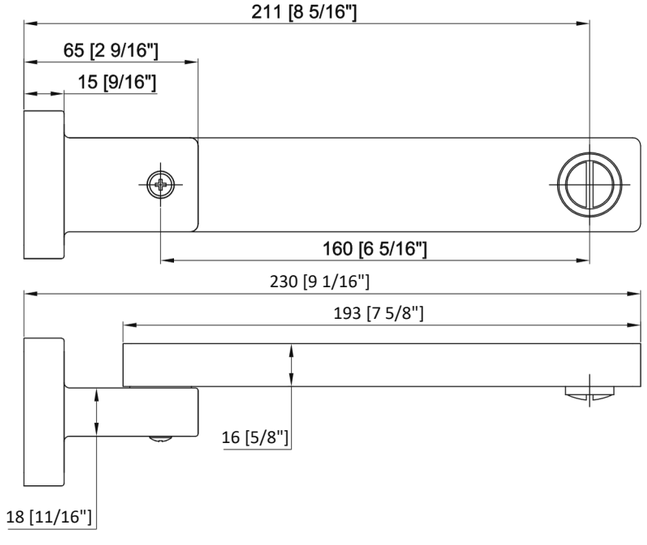

KITCHEN FAUCET

MATERIAL: STAINLESS STEEL

COLD AND HOT WATER FUNCTION



Gooseneck Kitchen Faucet (Chrome)
SKU: Q-82H37-CHR

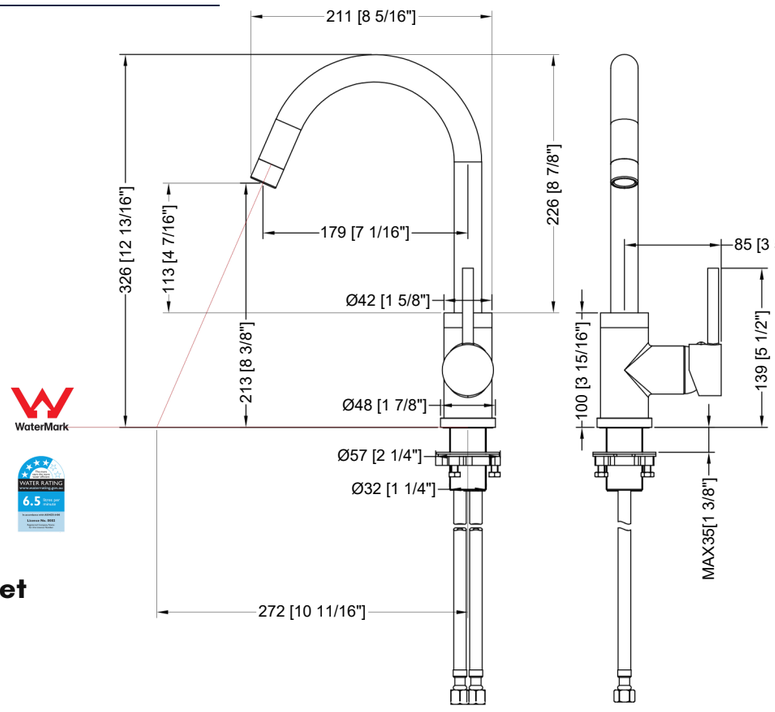





Gooseneck Kitchen Faucet (Brushed Nickel)
SKU: Q-82H37-BN



Gooseneck Kitchen Faucet (Matt Black)
SKU: Q-82H37-MB



Gooseneck Kitchen Faucet (Gunmetal)
SKU: Q-82H37-GM



Gooseneck Kitchen Faucet (Brushed Brass)
SKU: Q-82H37-SB

KITCHEN FAUCET

MATERIAL: STAINLESS STEEL

COLD AND HOT WATER FUNCTION







Pull-out Kitchen Faucet (Chrome)
SKU: Q-82H55-CHR

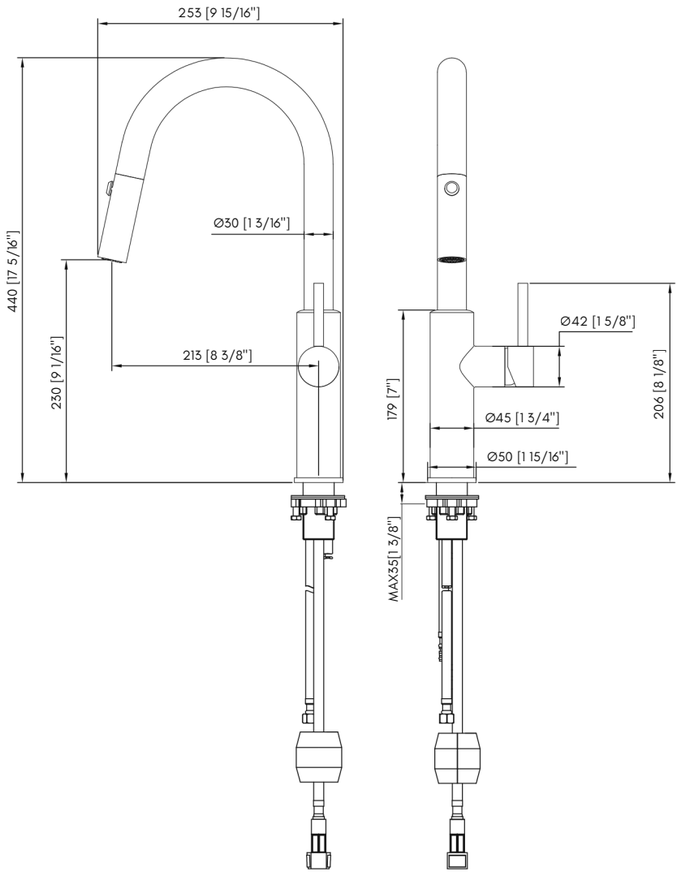



Pull-out Kitchen Faucet (Gunmetal)
SKU: Q-82H55-GM



Pull-out Kitchen Faucet (Brushed Nickel)
SKU: Q-82H55-BN



Pull-out Kitchen Faucet (Matt Black)
SKU: Q-82H55-MB



Pull-out Kitchen Faucet (Brushed Brass)
SKU: Q-82H55-SB

KITCHEN FAUCET

MATERIAL: STAINLESS STEEL

COLD AND HOT WATER FUNCTION

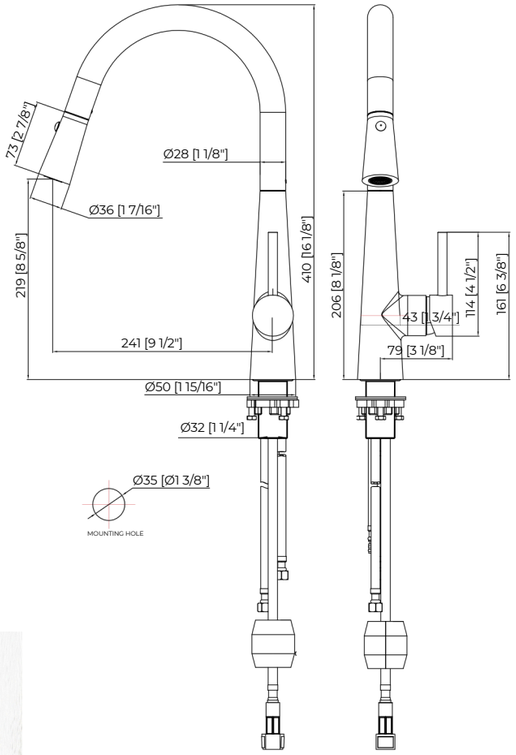





Pull-out Kitchen Faucet (Chrome)
SKU: Q-82H60-CHR



Pull-out Kitchen Faucet (Gunmetal)
SKU: Q-82H60-GM



Pull-out Kitchen Faucet (Matt Black)
SKU: Q-82H60-MB



Pull-out Kitchen Faucet (Brushed Brass)
SKU: Q-82H60-SB

KITCHEN FAUCET

Hot and Cold Water
Function
Material: Brass

Q-82H66-CHR



KITCHEN FAUCET

Hot and Cold Water
Function
Material: Brass

Q-82H66-GM



KITCHEN FAUCET

Hot and Cold Water
Function
Material: Brass

Q-82H66-BN



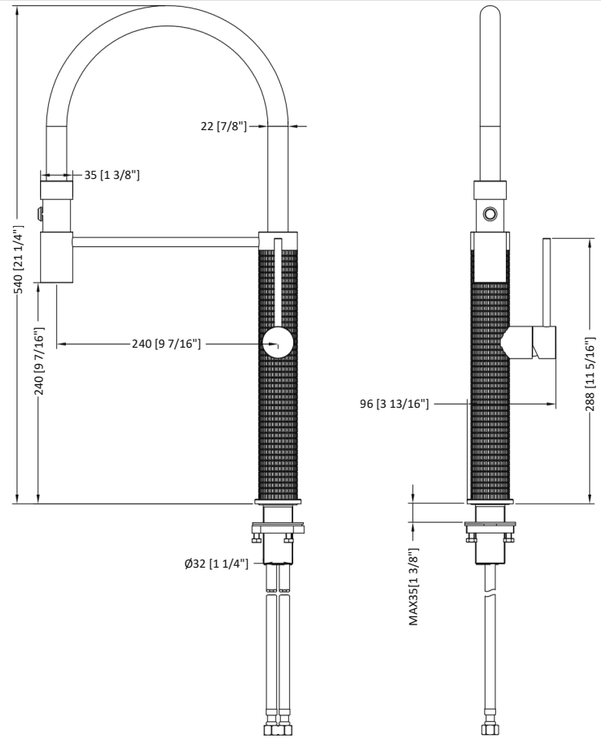

KITCHEN FAUCET

Hot and Cold Water
Function
Material: Brass

Q-82H66-MB



KITCHEN FAUCET

Hot and Cold Water
Function
Material: Brass

Q-82H66-SB





Pull-out Kitchen Faucet (Chrome)
SKU: Q-82H07-CHR



Pull-out Kitchen Faucet (Matt Black)
SKU: Q-82H07-MB

MATERIAL: STAINLESS STEEL

COLD AND HOT WATER FUNCTION



Pull-out Kitchen Faucet (Gunmetal)
SKU: Q-82H07-GM





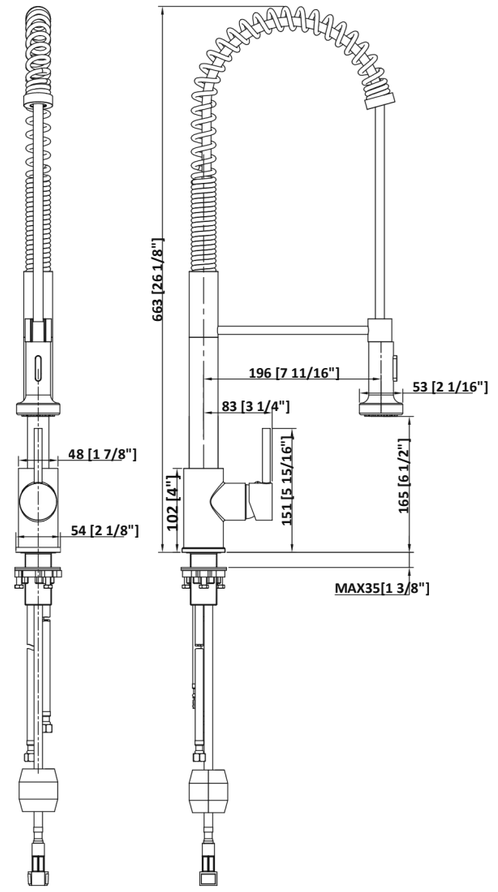



Kitchen/Laundry Faucet (Chrome)
SKU: Q-82H35-CHR



Kitchen/ Laundry Faucet (Gunmetal)
SKU: Q-82H35-GM



Kitchen/ Laundry Faucet (Brushed Nickel)
SKU: Q-82H35-BN



Kitchen/ Laundry Faucet (Matt Black)
SKU: Q-82H35-MB



Kitchen/ Laundry Faucet (Brushed Brass)
SKU: Q-82H35-SB

MATERIAL: STAINLESS STEEL

COLD AND HOT WATER FUNCTION

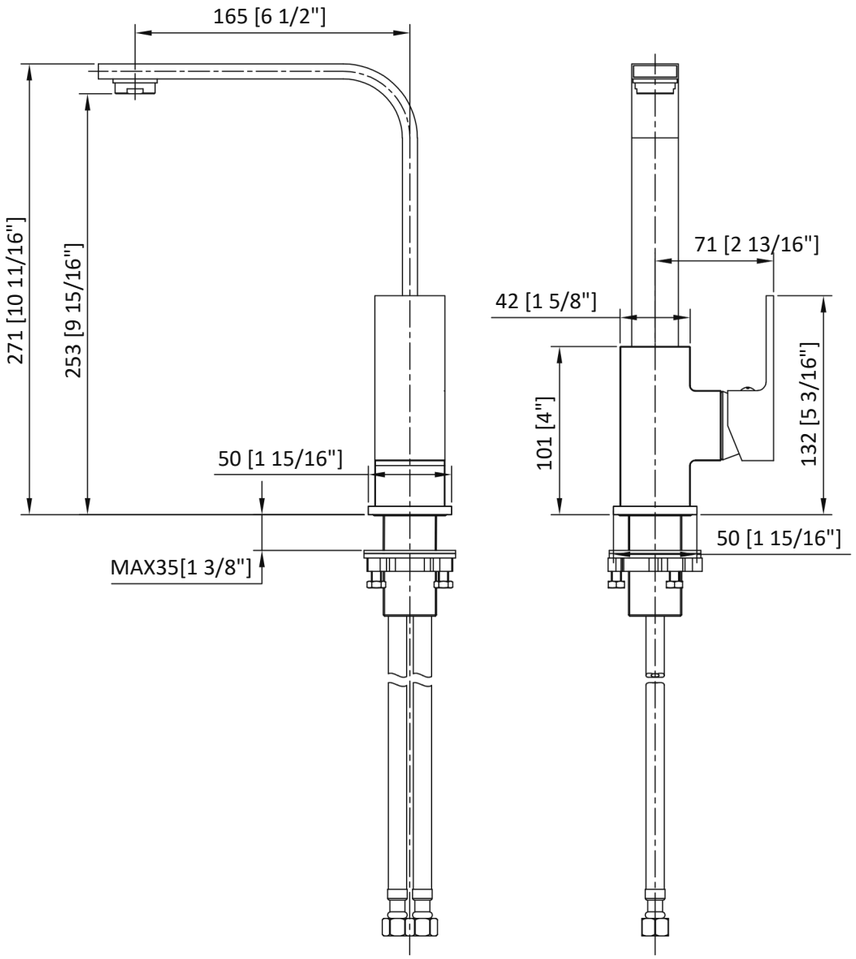





KITCHEN FAUCET

MATERIAL: STAINLESS STEEL

COLD AND HOT WATER FUNCTION

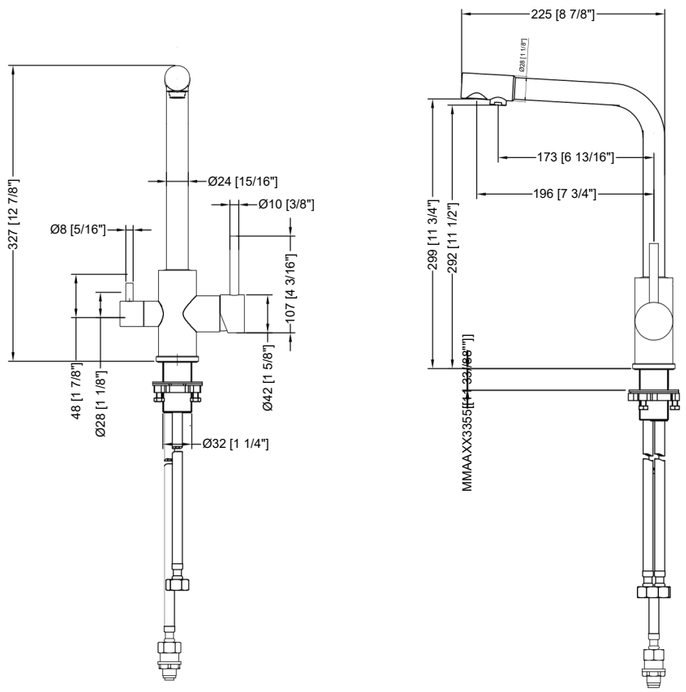





Dual Handle Kitchen Faucet (Chrome)
SKU: Q-82H83-CHR



Dual Handle Kitchen Faucet (Gunmetal)
SKU: Q-82H83-GM



Dual Handle Kitchen Faucet (Matt Black)
SKU: Q-82H83-MB



Dual Handle Kitchen Faucet (Brushed Brass)
SKU: Q-82H83-SB

MATERIAL: STAINLESS STEEL

COLD AND HOT WATER FUNCTION

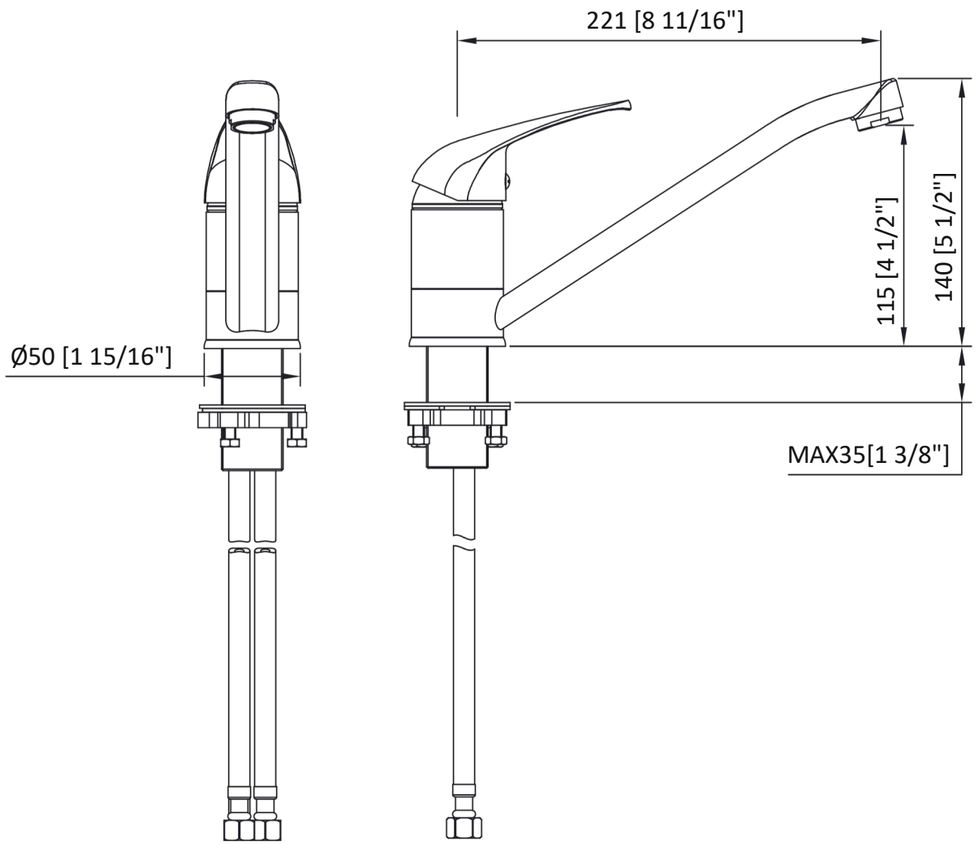





Laundry Faucet (Chrome)
SKU: Q-82H41-CHR



Laundry Faucet (Matt Black)
SKU: Q-82H41-MB



SHOWER MIXER

MATERIAL: STAINLESS STEEL

PLATE SIZE: 100X150MM

COLD AND HOT WATER FUNCTION

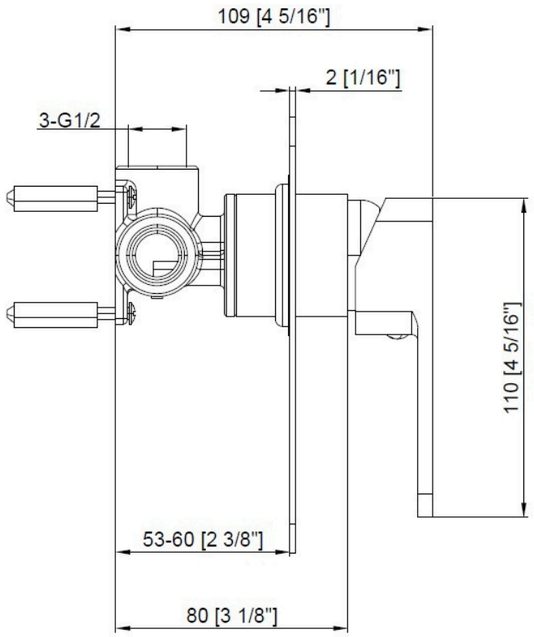

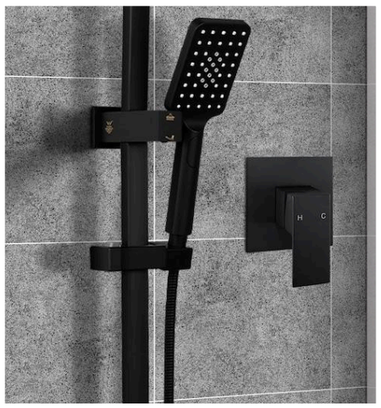

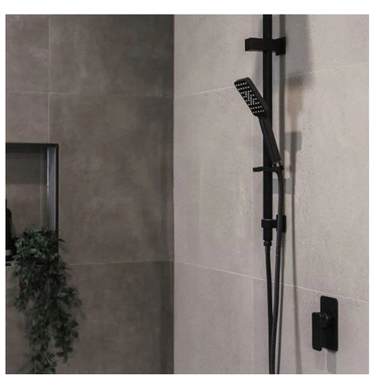

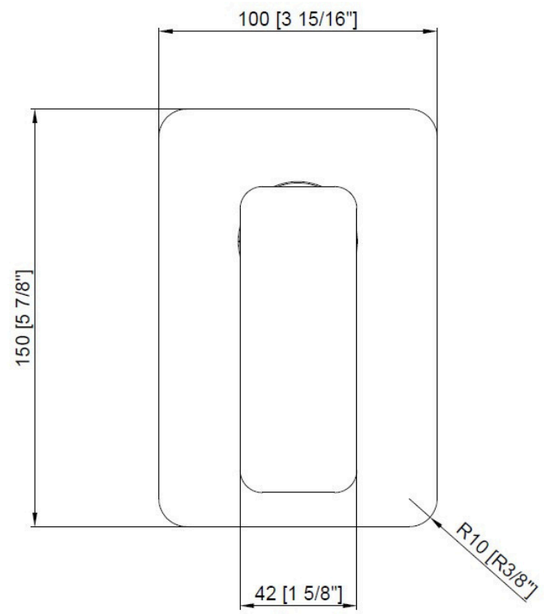



Shower Mixer Square (Chrome)
SKU: Q-V20S-CHR



Shower Mixer Square (Gunmetal)
SKU: Q-V20S-GM



Shower Mixer Square (Matt Black)
SKU: Q-V20S-MB



Shower Mixer Square (Brushed Nickel)
SKU: Q-V20S-BN



Shower Mixer Square (Brushed Brass)
SKU: Q-V20S-SB

MATERIAL: STAINLESS STEEL

COLD AND HOT WATER FUNCTION

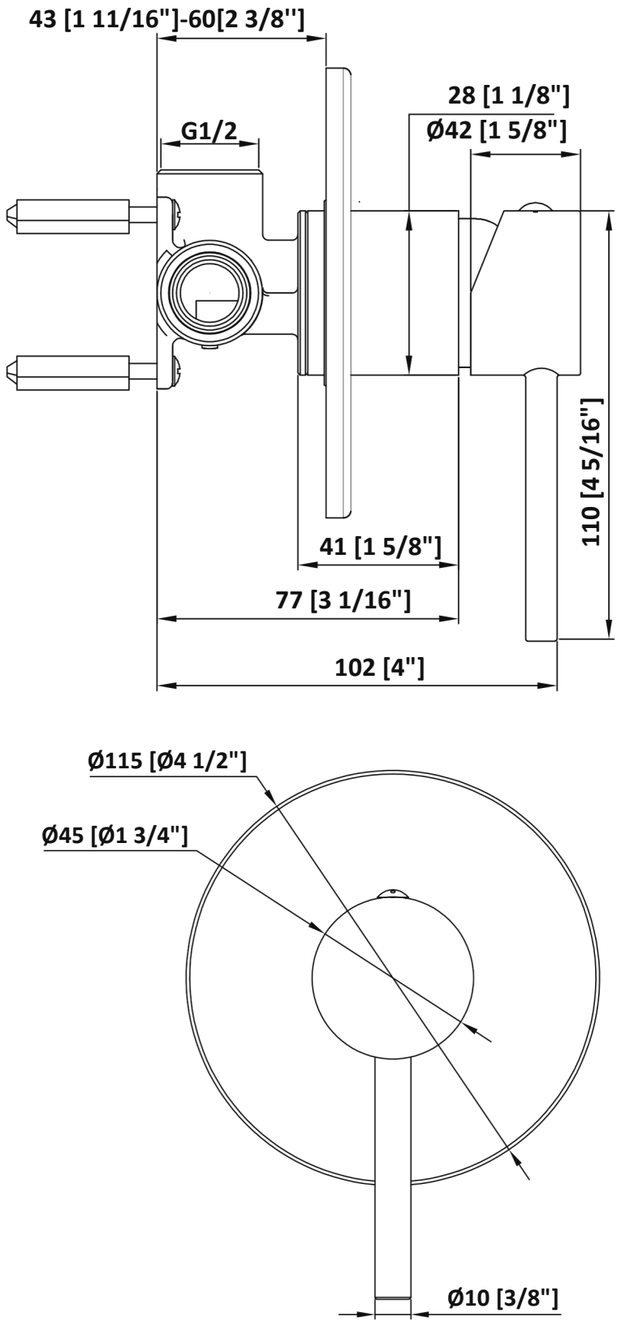







Shower Mixer Round (Chrome)
SKU: Q-V11S-CHR-L



Shower Mixer Round (Gunmetal)
SKU: Q-V11S-GM-L



Shower Mixer Round (Matt Black)
SKU: Q-V11S-MB-L



Shower Mixer Round (Brushed Nickel)
SKU: Q-V11S-BN-L



Shower Mixer Round (Brushed Brass)
SKU: Q-V11S-SB-L

SHOWER DIVERTER

MATERIAL: STAINLESS STEEL

COLD AND HOT WATER FUNCTION

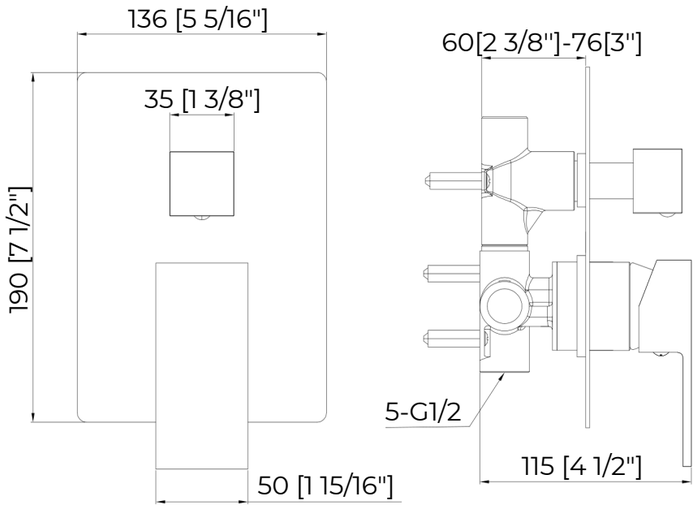

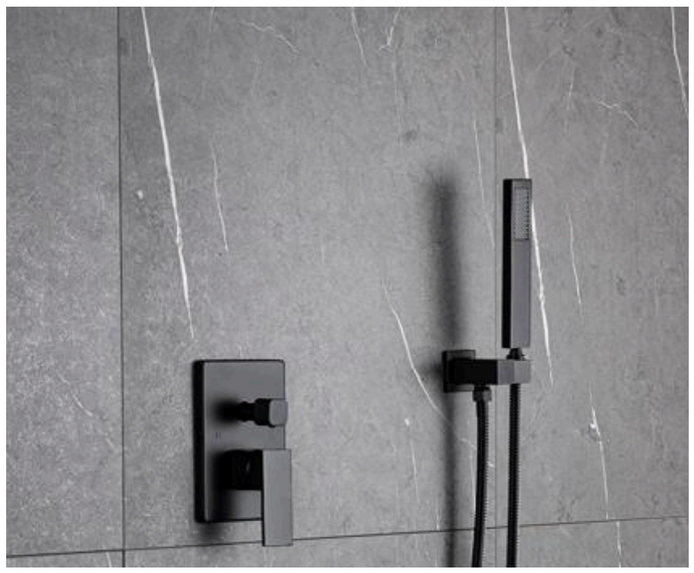



Shower Diverter Square (Chrome)
SKU: Q-V02-CHR



Shower Diverter Square (Gunmetal)
SKU: Q-V02-GM

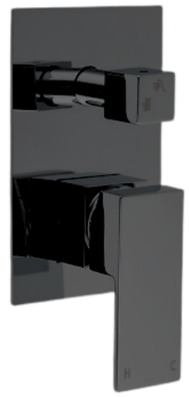

Shower Diverter Square (Matt Black)
SKU: Q-V02-MB



Shower Diverter Square (Brushed Brass)
SKU: Q-V02-SB

SHOWER DIVERTER

MATERIAL: STAINLESS STEEL

COLD AND HOT WATER FUNCTION

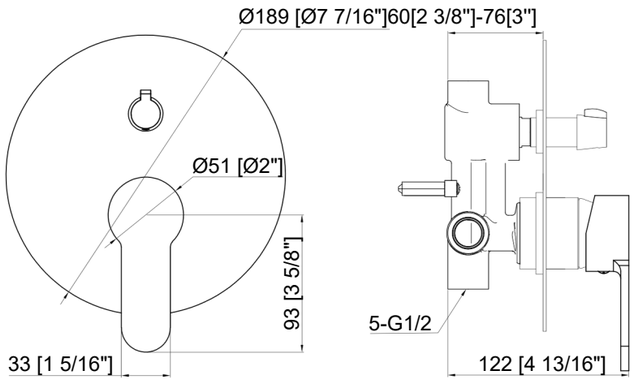

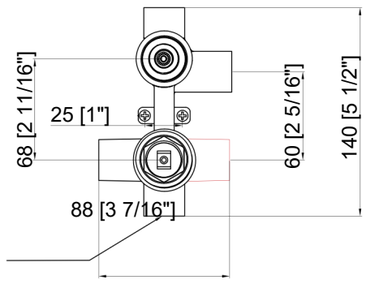

5-G1/2





Round Shower Diverter (Chrome)
SKU: Q-V04-CHR



Round Shower Diverter (Gunmetal)
SKU: Q-V04-GM



Round Shower Diverter (Matt Black)
SKU: Q-V04-MB



Round Shower Diverter (Brushed Brass)
SKU: Q-V04-SB

TUB FAUCET

MATERIAL: BRASS

HOSE: SS304 /1.5M

HAND SHOWER: SS304

COLD AND HOT WATER FUNCTION



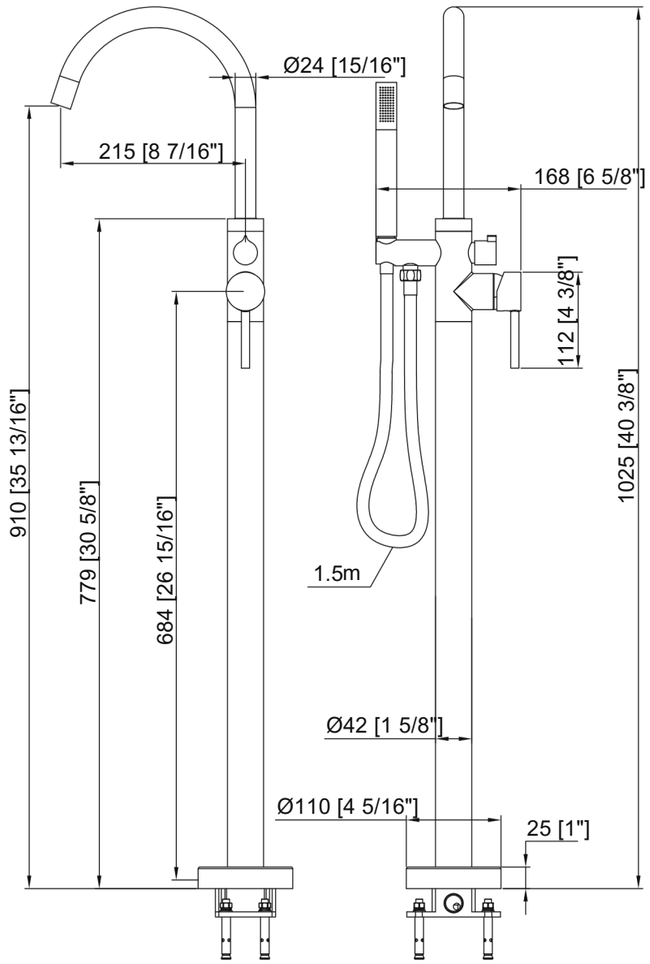

Adjustable base plate with O-ring inside to up and down.



WaterMark

WATER RATING 6.5 litres per minute

Tub Faucet with Mixer (Matt Black)

SKU: Q-86H88-MB



WaterMark

WATER RATING 6.5 litres per minute

Tub Faucet with Mixer (Chrome)

SKU: Q-86H88-CHR

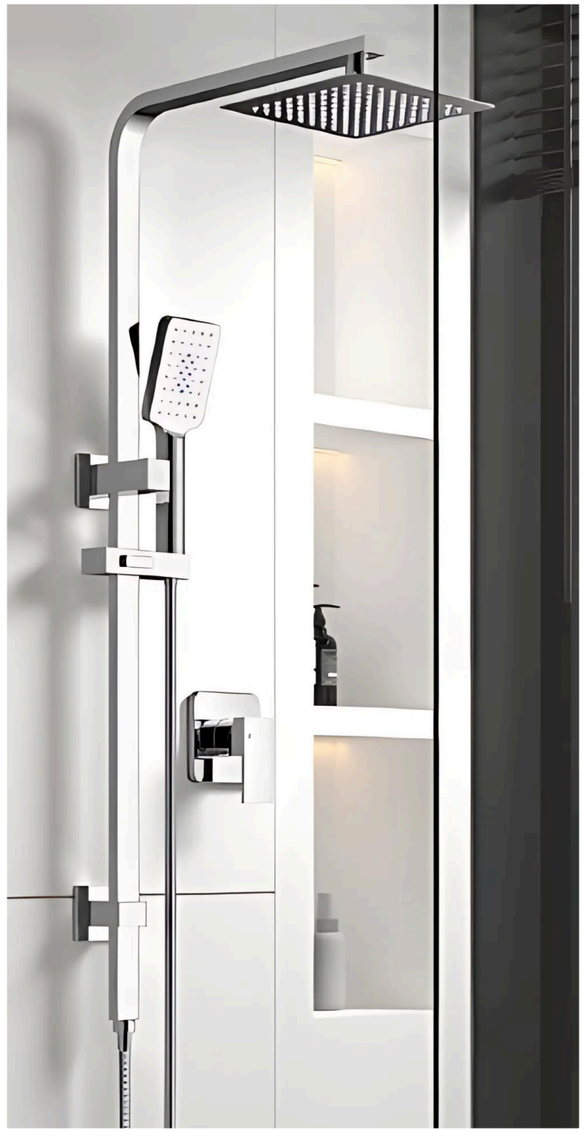

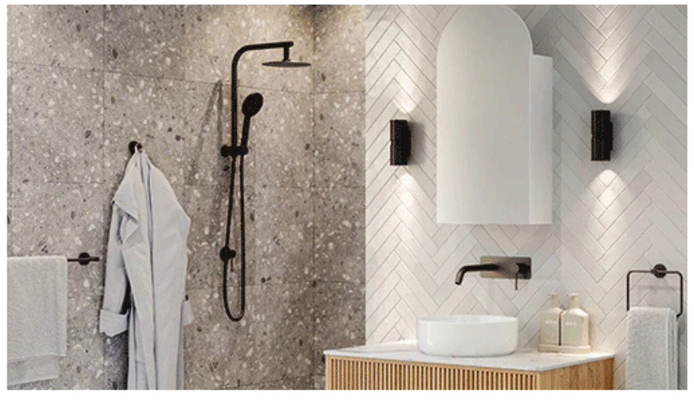



SHOWER SETS

ROUND SHOWER SET



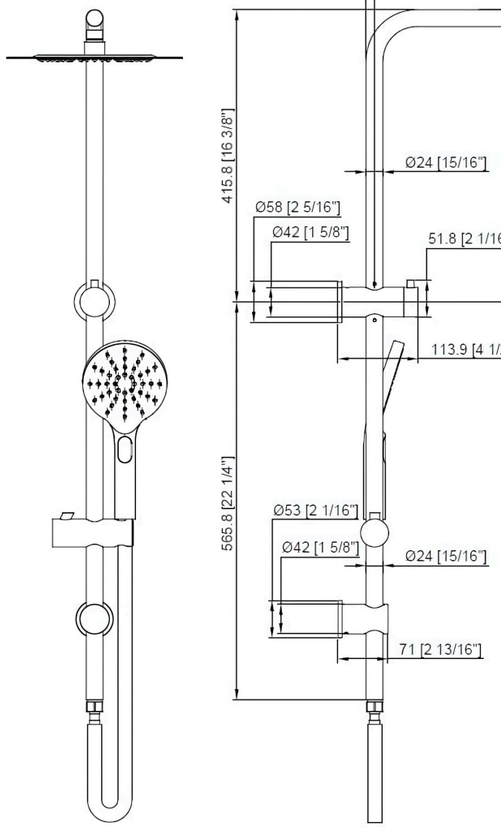

Round Shower Set
(Chrome)
SKU: Q-86H66-CHR-250

SPECIFICATIONS

- **Main body:** Brass
- **Shower head:** 250mm (10'') / SS304
- **Handheld shower:** ABS / 3-function
- **Hose:** 1.5M / SS304



Round Shower Set
(Brushed Nickel)
SKU: Q-86H66-BN-250



Round Shower Set
(Gunmetal)
SKU: Q-86H66-GM-250



Round Shower Set
(Matt Black)
SKU: Q-86H66-MB-250



Round Shower Set
(Brushed Brass)
SKU: Q-86H66-SB-250



Square Shower Set (Gunmetal)
SKU: Q-86H61-GM-250



Square Shower Set (Brushed Nickel)
SKU: Q-86H61-BN-250



Square Shower Set (Matt Black)
SKU: Q-86H61-MB-250



Square Shower Set (Brushed Brass)
SKU: Q-86H61-SB-250

SQUARE SHOWER SET

SPECIFICATIONS

- **Main body:** Brass
- **Shower head:** 250mm (10'') / SS304
- **Handheld shower:** ABS / 3-function
- **Hose:** 1.5M / SS304



Square Shower Set (Chrome)
SKU: Q-86H61-CHR-250

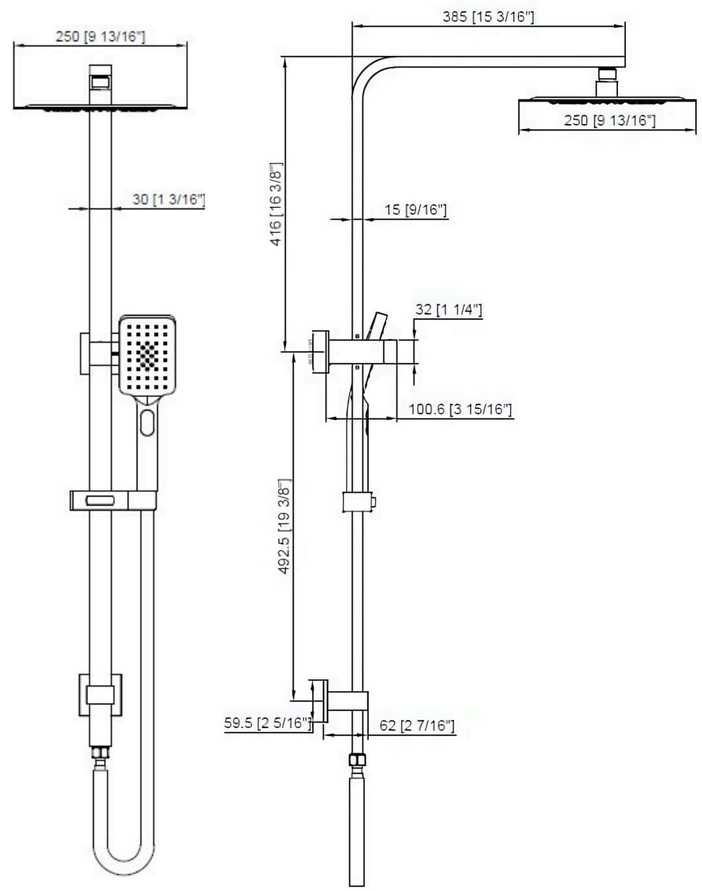

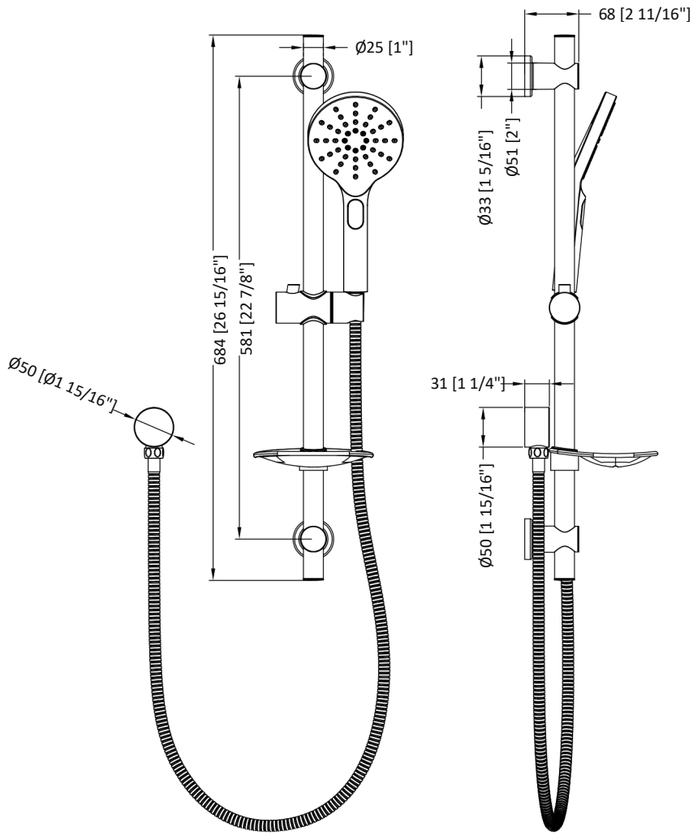





Single Rail Round Shower Set (Chrome)
SKU: Q-T7-CHR-N



Single Rail Round Shower Set (Gunmetal)
SKU: Q-T7-GM-N



Single Rail Round Shower Set (Matt Black)
SKU: Q-T7-MB-N

SPECIFICATIONS

- **Main body:** Brass
- **Hose:** 1.5M /SS304
- **Handheld shower:** ABS / 3-function



Single Rail Square Shower Set (Chrome)
SKU: Q-T6-CHR-N



Single Rail Square Shower Set (Gunmetal)
SKU: Q-T6-GM-N



Single Rail Square Shower Set (Matt Black)
SKU: Q-T6-MB-N

SPECIFICATIONS

- **Main body:** Brass
- **Hose:** 1.5M /SS304
- **Handheld shower:** ABS / 3-function



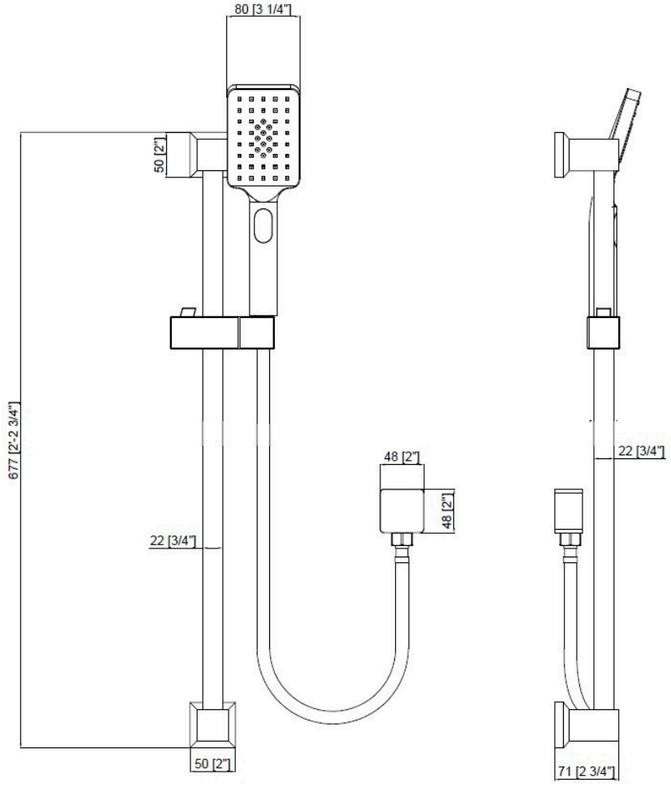



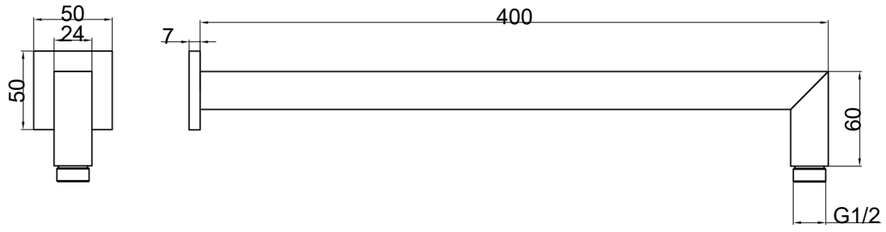



WaterMark

Shower Arm (Chrome)
SKU: Q-SA10-CHR



WaterMark

Shower Arm (Gunmetal)
SKU: Q-SA10-GM



WaterMark

Shower Arm (Matt Black)
SKU: Q-SA10-MB



WaterMark

Shower Arm (Brushed Brass)
SKU: Q-SA10-SB



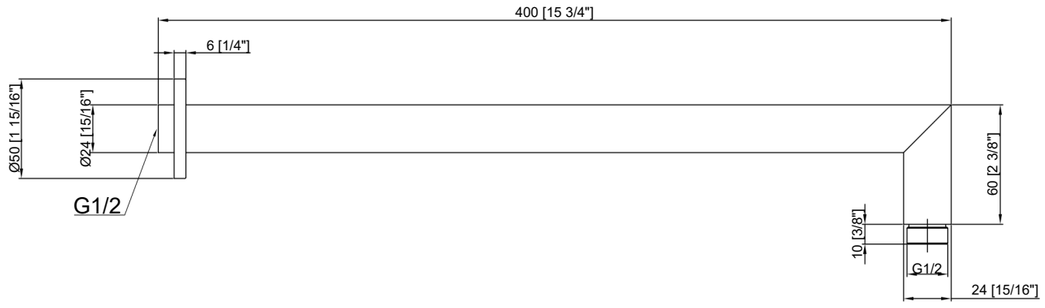



WaterMark

Shower Arm Square (Chrome)
SKU: Q-SA11-CHR



WaterMark

Shower Arm Square (Gunmetal)
SKU: Q-SA11-GM



WaterMark

Shower Arm Square (Matt Black)
SKU: Q-SA11-MB



WaterMark

Shower Arm Square (Brushed Brass)
SKU: Q-SA11-SB



Round Shower Head 250mm (Chrome)
SKU: Q-SH23250-CHR



Round Shower Head 250mm (Matt Black)
SKU: Q-SH23250-MB



Round Shower Head 250mm (Gunmetal)
SKU: Q-SH23250-GM



Round Shower Head 250mm (Brushed Brass)
SKU: Q-SH23250-SB



Square Shower Head 250mm (Chrome)
SKU: Q-SH43250-CHR



Square Shower Head 250mm (Matt Black)
SKU: Q-SH43250-MB



Square Shower Head 250mm (Gunmetal)
SKU: Q-SH43250-GM

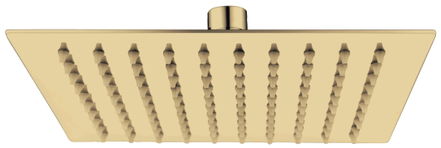

Square Shower Head 250mm (Brushed Brass)
SKU: Q-SH43250-SB

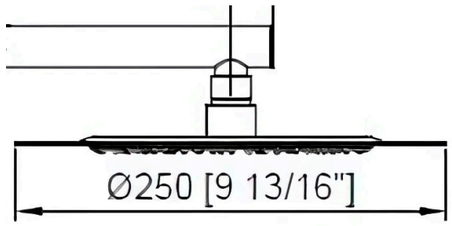

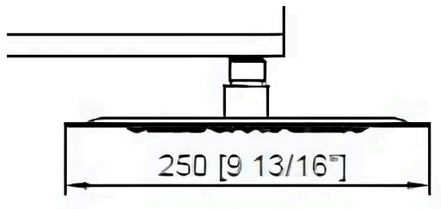











ACCESSORIES



ACCESSORIES



SQUARE TOWEL RING (CHROME)
SKU: Q-6607X008CP
MATERIALS: ZINC ALLOY+S.S



SQUARE TOWEL RING (GUNMETAL)
SKU: Q-6607X008GM
MATERIALS: ZINC ALLOY+S.S



SQUARE TOWEL RING (BRUSHED NICKEL)
SKU: Q-6607X008BN
MATERIALS: ZINC ALLOY+S.S



SQUARE TOWEL RING (MATT BLACK)
SKU: Q-6607X008MB
MATERIALS: ZINC ALLOY+S.S

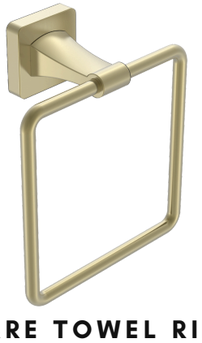

SQUARE TOWEL RING (BRUSHED BRASS)
SKU: Q-6607X008SB
MATERIALS: ZINC ALLOY+S.S



ROUND TOWEL RING (CHROME)
SKU: Q-6607S003CP
MATERIALS: S.S



ROUND TOWEL RING (GUNMETAL)
SKU: Q-6607S003GM
MATERIALS: S.S



ROUND TOWEL RING (BRUSHED BRASS)
SKU: Q-6607S003SB
MATERIALS: S.S



ROUND TOWEL RING (BRUSHED NICKEL)
SKU: Q-6607S003BN
MATERIALS: S.S



ROUND TOWEL RING (MATT BLACK)
SKU: Q-6607S003MB
MATERIALS: S.S

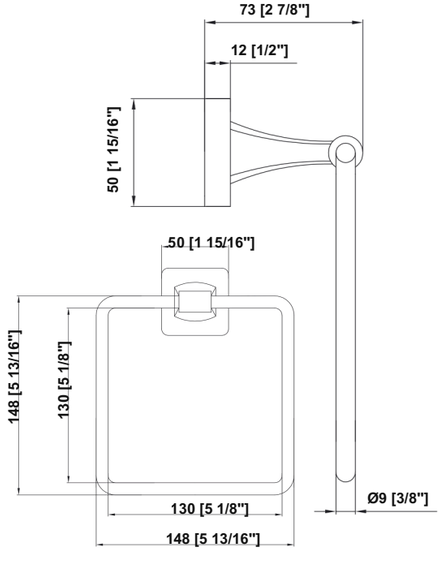

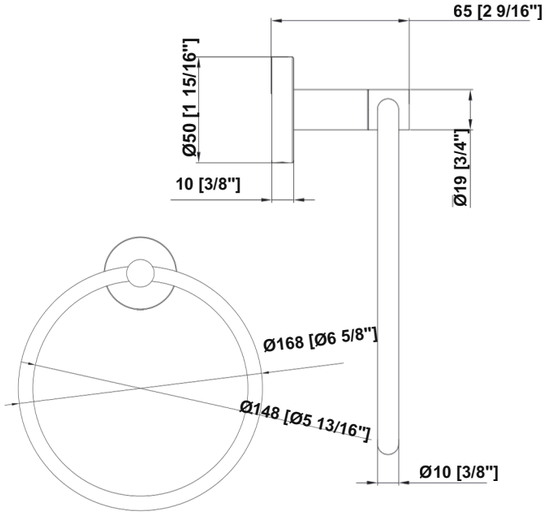

ACCESSORIES



ROUND TOILET PAPER HOLDER (CHROME)
SKU: Q-6603S003CP
MATERIALS: S.S

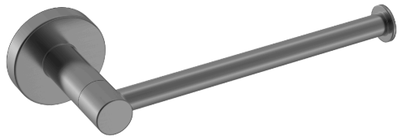

ROUND TOILET PAPER HOLDER (GUNMETAL)
SKU: Q-6603S003GM
MATERIALS: S.S



ROUND TOILET PAPER HOLDER (BRUSHED NICKEL)
SKU: Q-6603S003BN
MATERIALS: S.S



ROUND TOILET PAPER HOLDER (MATT BLACK)
SKU: Q-6603S003MB
MATERIALS: S.S

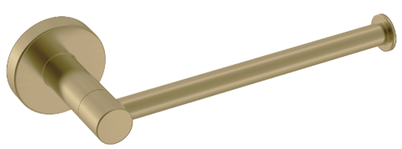

ROUND TOILET PAPER HOLDER (BRUSHED BRASS)
SKU: Q-6603S003SB
MATERIALS: S.S

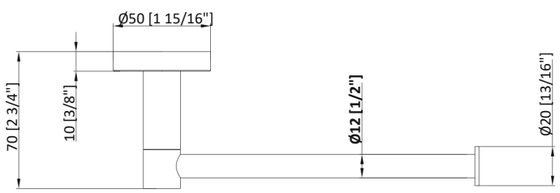

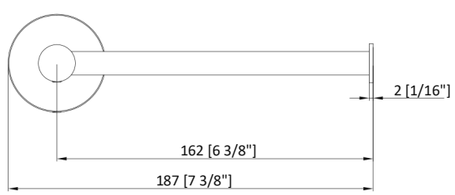



SQUARE TOILET PAPER HOLDER (CHROME)
SKU: Q-6603X001CP
MATERIALS: ZINC ALLOY+S.S

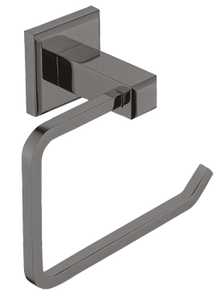

SQUARE TOILET PAPER HOLDER (GUNMETAL)
SKU: Q-6603X001GM
MATERIALS: ZINC ALLOY+S.S

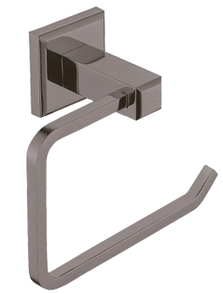

SQUARE TOILET PAPER HOLDER (BRUSHED NICKEL)
SKU: Q-6603X001BN
MATERIALS: ZINC ALLOY+S.S

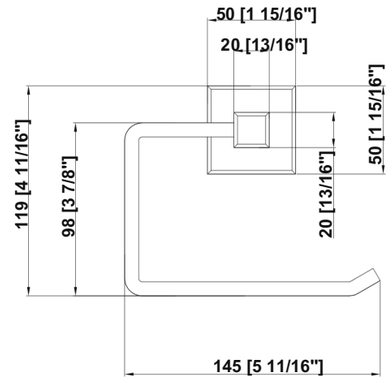

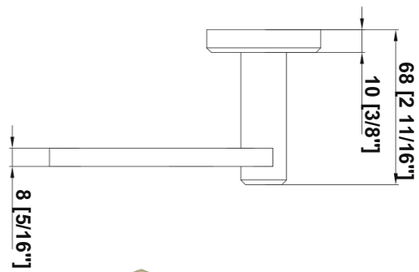



SQUARE TOILET PAPER HOLDER (MATT BLACK)
SKU: Q-6603X001MB
MATERIALS: ZINC ALLOY+S.S



SQUARE TOILET PAPER HOLDER (BRUSHED BRASS)
SKU: Q-6603X001SB
MATERIALS: ZINC ALLOY+S.S

ACCESSORIES

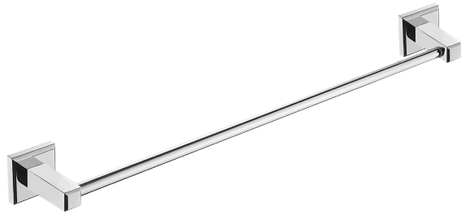

SINGLE SQUARE TOWEL BAR (CHROME)
SKU: Q-6601X001CP
MATERIALS: ZINC ALLOY+S.S
DIMENSIONS: 60CM



SINGLE SQUARE TOWEL BAR (GUNMETAL)
SKU: Q-6601X001GM
MATERIALS: ZINC ALLOY+S.S
DIMENSIONS: 60CM

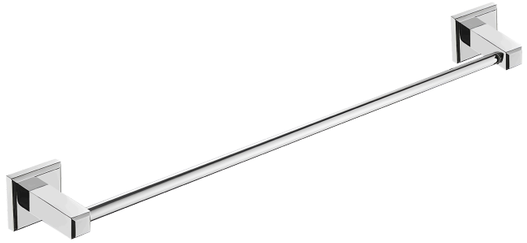

SINGLE SQUARE TOWEL BAR (CHROME)
SKU: Q-6601X001CP-90
MATERIALS: ZINC ALLOY+S.S
DIMENSIONS: 90CM



SINGLE SQUARE TOWEL BAR (GUNMETAL)
SKU: Q-6601X001GM-90
MATERIALS: ZINC ALLOY+S.S
DIMENSIONS: 90CM



SINGLE SQUARE TOWEL BAR (MATT BLACK)
SKU: Q-6601X001MB
MATERIALS: ZINC ALLOY+S.S
DIMENSIONS: 60CM



SINGLE SQUARE TOWEL BAR (BRUSHED BRASS)
SKU: Q-6601X001SB
MATERIALS: ZINC ALLOY+S.S
DIMENSIONS: 60CM



SINGLE SQUARE TOWEL BAR (MATT BLACK)
SKU: Q-6601X001MB-90
MATERIALS: ZINC ALLOY+S.S
DIMENSIONS: 90CM



SINGLE SQUARE TOWEL BAR (BRUSHED BRASS)
SKU: Q-6601X001SB-90
MATERIALS: ZINC ALLOY+S.S
DIMENSIONS: 90CM



SINGLE SQUARE TOWEL BAR (BRUSHED NICKEL)
SKU: Q-6601X001BN
MATERIALS: ZINC ALLOY+S.S
DIMENSIONS: 60CM

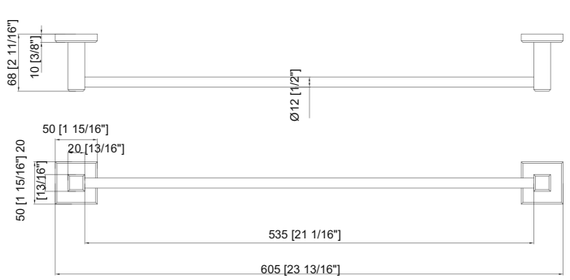

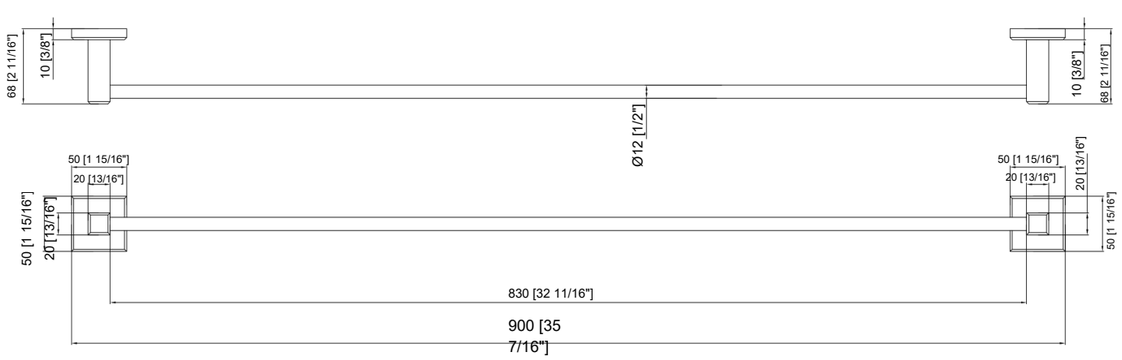

ACCESSORIES



SINGLE ROUND TOWEL BAR (CHROME)
SKU: Q-6601S003CP
MATERIALS: S.S
DIMENSIONS: 60CM

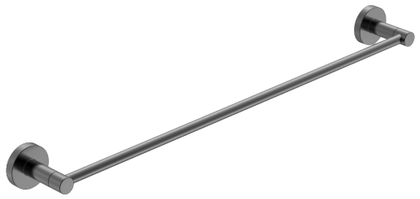

SINGLE ROUND TOWEL BAR (GUNMETAL)
SKU: Q-6601S003GM
MATERIALS: S.S
DIMENSIONS: 60CM



SINGLE ROUND TOWEL BAR (CHROME)
SKU: Q-6601S003CP-90
MATERIALS: S.S
DIMENSIONS: 90CM

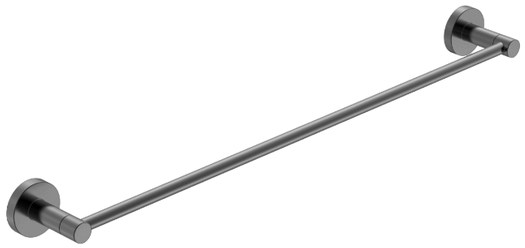

SINGLE ROUND TOWEL BAR (GUNMETAL)
SKU: Q-6601S003GM-90
MATERIALS: S.S
DIMENSIONS: 90CM

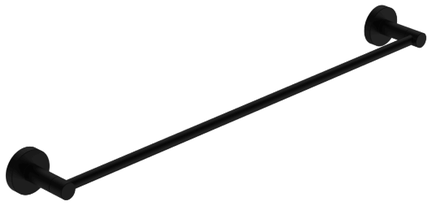

SINGLE ROUND TOWEL BAR (MATT BLACK)
SKU: Q-6601S003MB
MATERIALS: S.S
DIMENSIONS: 60CM



SINGLE ROUND TOWEL BAR (BRUSHED NICKEL)
SKU: Q-6601S003BN
MATERIALS: S.S
DIMENSIONS: 60CM

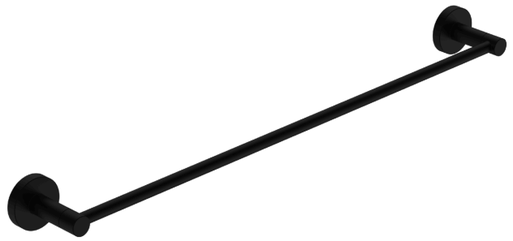

SINGLE ROUND TOWEL BAR (MATT BLACK)
SKU: Q-6601S003MB-90
MATERIALS: S.S
DIMENSIONS: 90CM

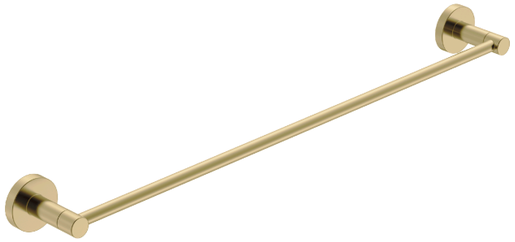

SINGLE ROUND TOWEL BAR (BRUSHED BRASS)
SKU: Q-6601S003SB-90
MATERIALS: S.S
DIMENSIONS: 90CM

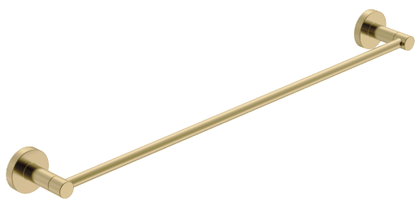

SINGLE ROUND TOWEL BAR (BRUSHED BRASS)
SKU: Q-6601S003SB
MATERIALS: S.S
DIMENSIONS: 60CM

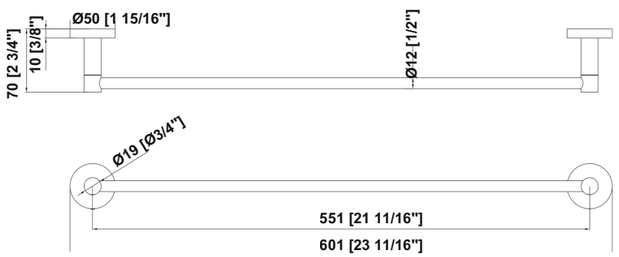

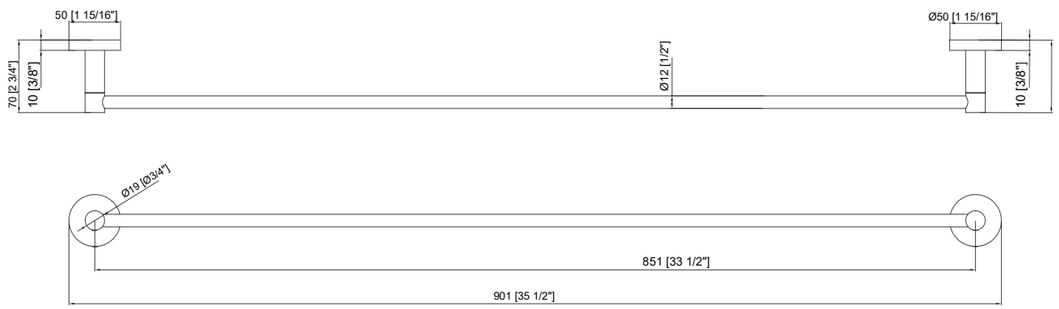

ACCESSORIES

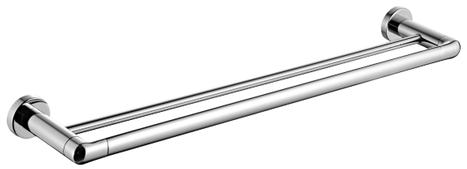

DOUBLE TOWEL BAR (CHROME)
SKU: Q-6602X015CP
MATERIALS: S.S
DIMENSIONS: 60CM



DOUBLE TOWEL BAR (GUNMETAL)
SKU: Q-6602X015GM
MATERIALS: S.S
DIMENSIONS: 60CM



DOUBLE TOWEL BAR (MATT BLACK)
SKU: Q-6602X015MB
MATERIALS: S.S
DIMENSIONS: 60CM



DOUBLE TOWEL BAR (BRUSHED NICKEL)
SKU: Q-6602X015BN
MATERIALS: S.S
DIMENSIONS: 60CM

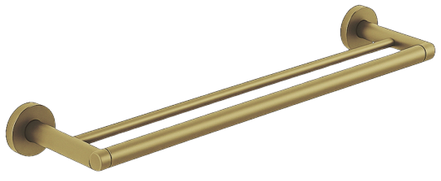

DOUBLE TOWEL BAR (BRUSHED BRASS)
SKU: Q-6602X015SB
MATERIALS: S.S
DIMENSIONS: 60CM

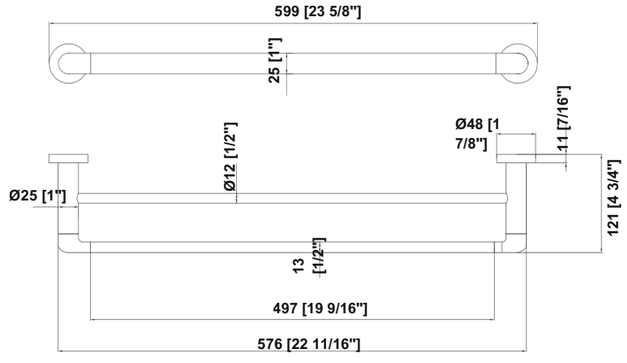

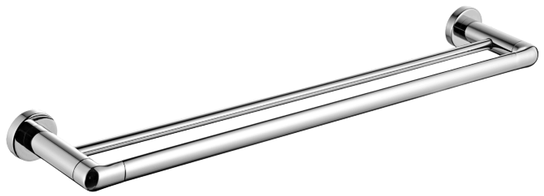

DOUBLE TOWEL BAR 90CM (CHROME)
SKU: Q-6602X015CP-90
MATERIALS: S.S
DIMENSIONS: 90CM

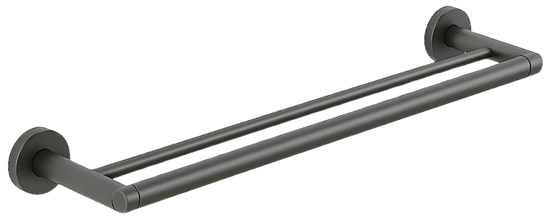

DOUBLE TOWEL BAR 90CM (GUNMETAL)
SKU: Q-6602X015GM-90
MATERIALS: S.S
DIMENSIONS: 90CM



DOUBLE TOWEL BAR 90CM (MATT BLACK)
SKU: Q-6602X015MB-90
MATERIALS: S.S
DIMENSIONS: 90CM

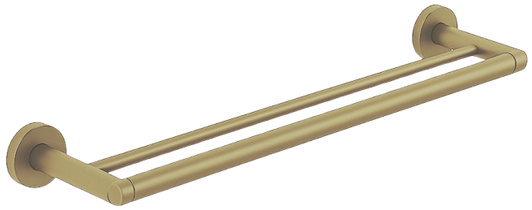

DOUBLE TOWEL BAR 90CM (BRUSHED NICKEL)
SKU: Q-6602X015SB-90
MATERIALS: S.S
DIMENSIONS: 90CM

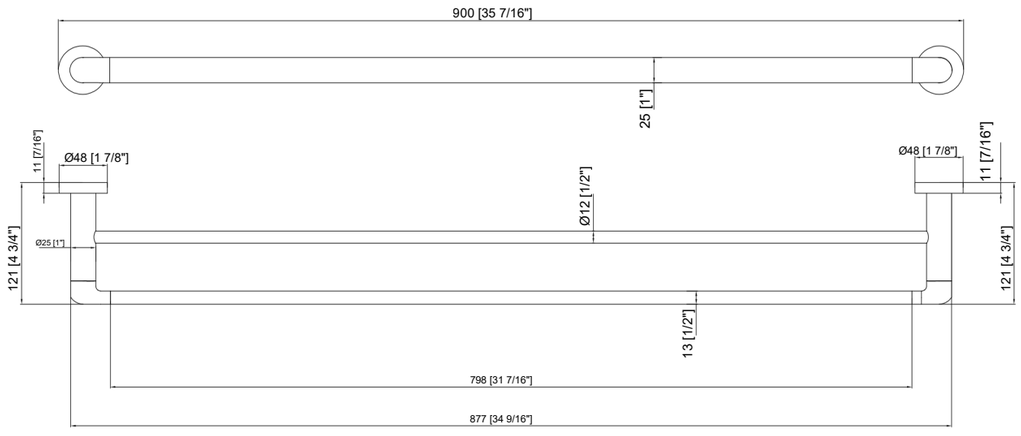



BATHTUBS









ACRYLIC FREESTANDING BATHTUB 9003

Dimensions: 1500×750×580mm

SKU: Q-9003 _1500



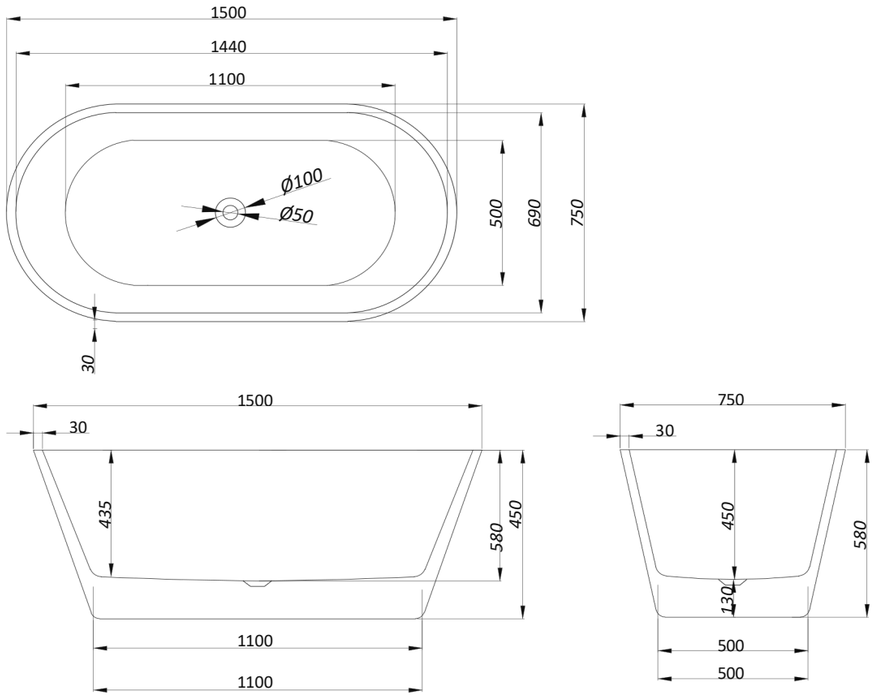



ACRYLIC FREESTANDING BATHTUB 9003

Dimensions: 1700×800×580mm

SKU: Q-9003 _1700



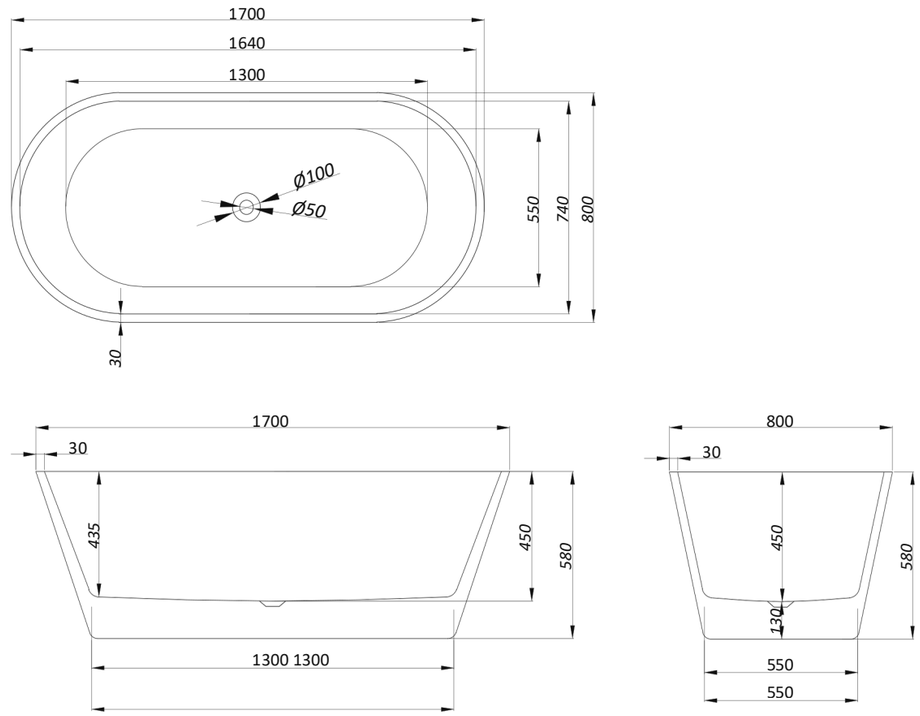

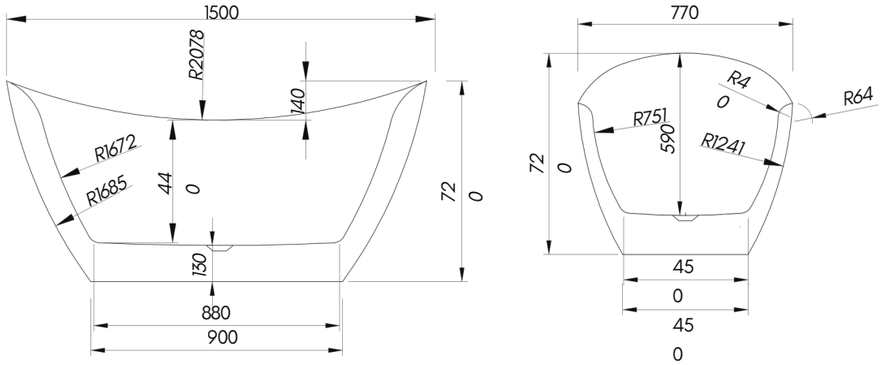

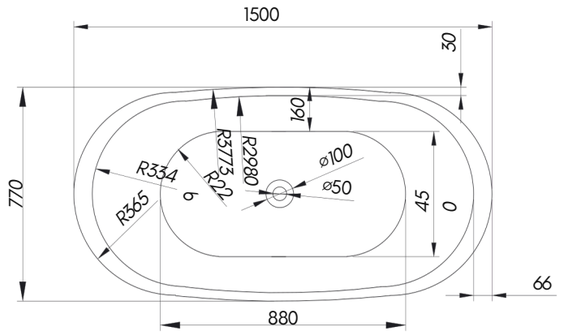



ACRYLIC FREESTANDING BATHTUB 9014 (WHITE)

Dimensions: 1500×770×720mm

SKU: Q-9014_1500



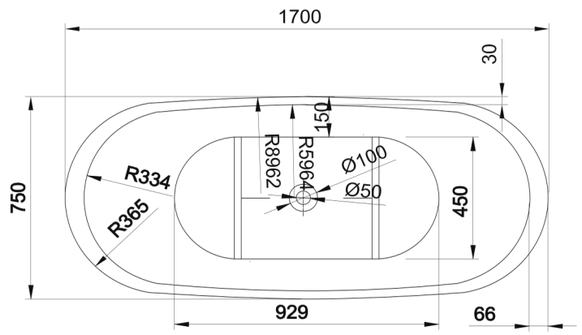

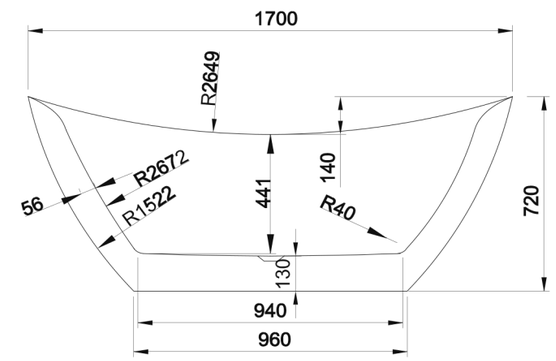

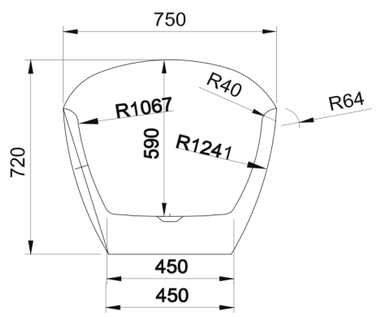



ACRYLIC FREESTANDING BATHTUB 9014 (WHITE)

Dimensions: 1700×750×720mm

SKU: Q-9014 _1700



ACRYLIC FREESTANDING BATHTUB 9014 (BLACK)

Dimensions: 1500×770×720mm

SKU: Q-9014_(1500 BLACK)

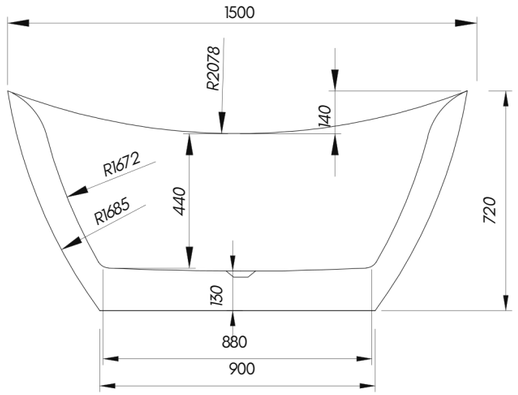

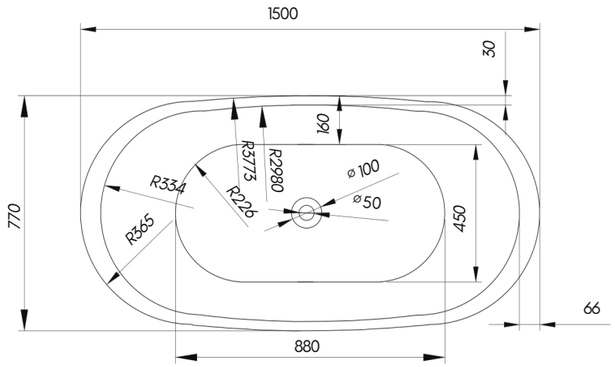

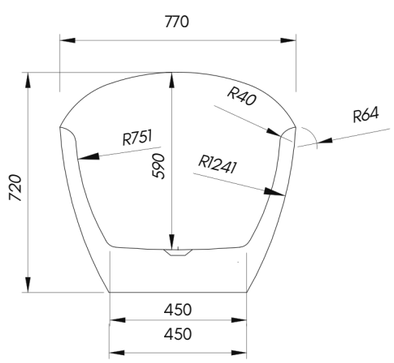





ACRYLIC FREESTANDING FLUTED BATHTUB 9003T

Dimensions: 1500×700×560mm

SKU: Q-9003T-L(1500)



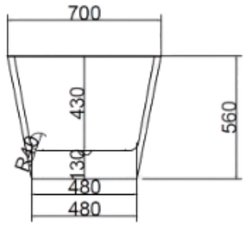

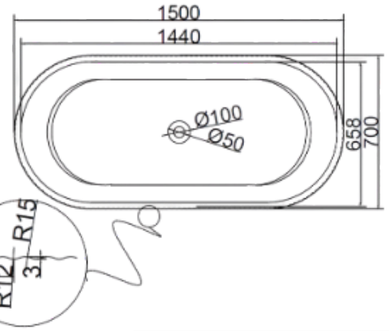

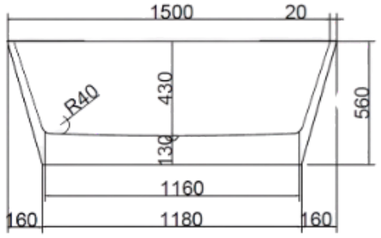







ACRYLIC FREESTANDING FLUTED BATHTUB 9003T-L

Dimensions: 1700×800×600mm

SKU: Q-9003T-L(1700)

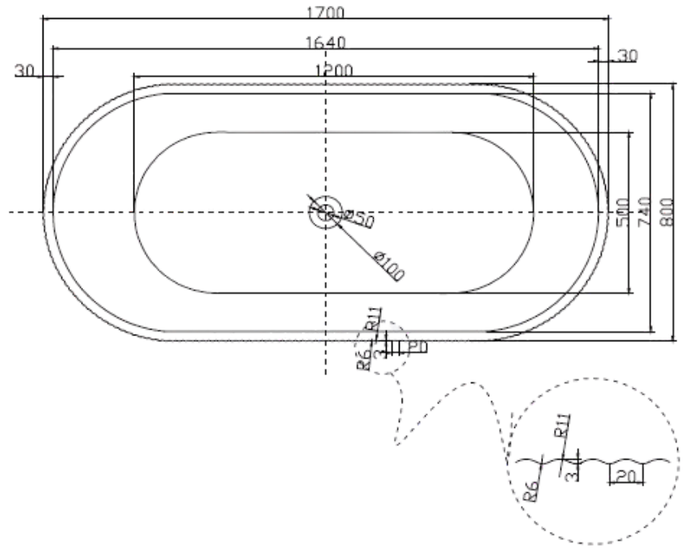

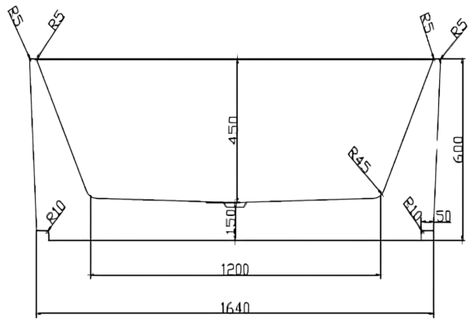

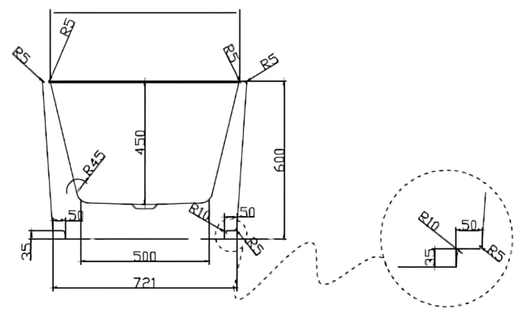







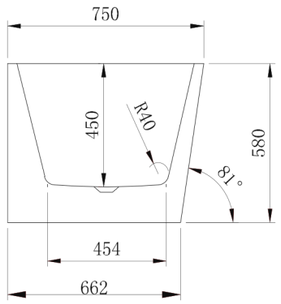



ACRYLIC BACK TO WALL BATHTUB 9019

Dimensions: 1500×750×580mm

SKU: Q-9019(1500)

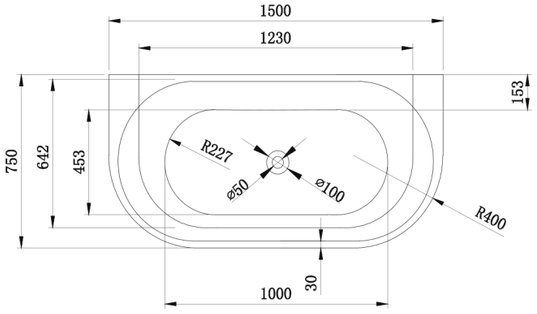

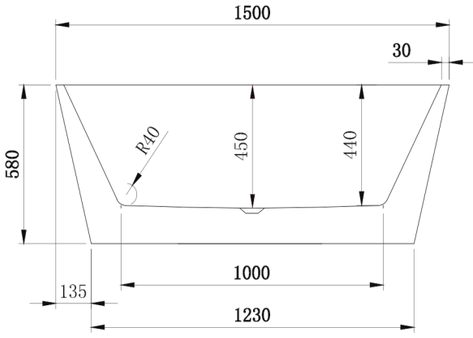





ACRYLIC BACK TO WALL BATHTUB 9019

Dimensions: 1700×800×580mm

SKU: Q-9019(1700)

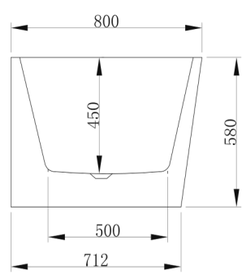



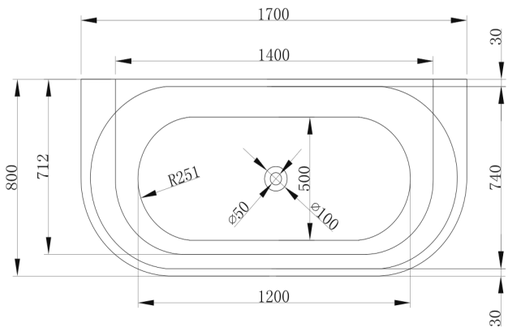

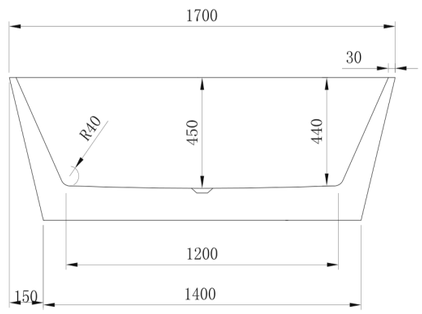

BATHTUBS



ACRYLIC BACK TO WALL FLUTED BATHTUB 9019T

Dimensions: 1500×750×580mm

SKU: Q-9019T(1500)

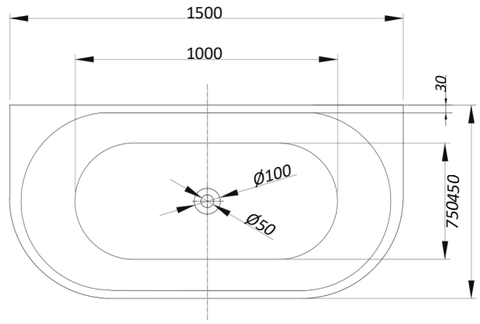

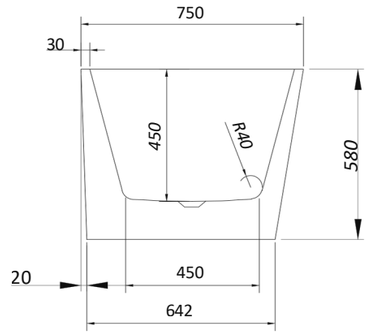

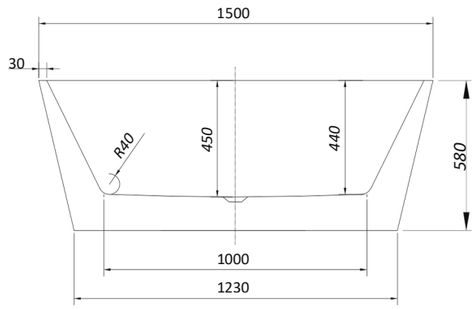





ACRYLIC BACK TO WALL FLUTED BATHTUB 9019T

Dimensions: 1700×800×580mm

SKU: Q-9019T(1700)

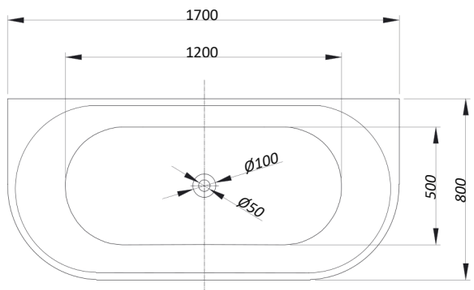

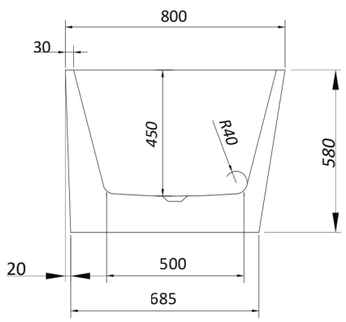

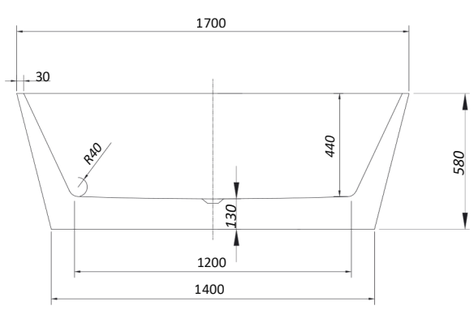



BATHTUB POP UP



SINK DRAINER (BLACK)

SKU: Q-DRAINAGEPLUG MATT BLACK



SINK DRAINER (SATIN)

SKU: Q-DRAINAGEPLUG GUN GREY



SINK DRAINER (BRUSHED BRASS)

SKU: Q-DRAINAGEPLUG BRUSHED BRASS





TOILETS





TORNADO-X

Flush Technology

Cleaner

No splash. No grime. Just pristine hygiene.
Tornado X Flush harnesses optimised water pressure and seamless bowl curves to sweep away bacteria—without the messy rebound. With no overhanging base to trap dirt, cleaning becomes effortless and thorough.

Smarter

Designed to disappear into your space, not disrupt it.
Our sleek, unobtrusive silhouette blends form with function, offering you smarter flushing performance and intuitive maintenance. Every curve and is engineered for efficiency and elegance.

Quieter

Flush without all the fuss!
Experience a 20% reduction in noise compared to traditional toilets. Tornado X Flush delivers powerful performance in near silence. It's perfect for homes that value peace as much as cleanliness.



TORNADO 3.0
WASHDOWN TWO-PIECE TOILET
SKU: Q-B-P3096

- 640X365X830
- GLOSSY WHITE
- AAA CERAMIC
- P-TRAP:180
- S-TRAP: 100-220
- UF SEAT COVER





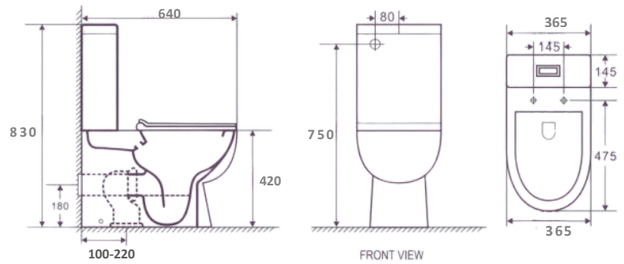

TORNADO 3.0
WASHDOWN TWO-PIECE TOILET
SKU: Q-B-P3092

- 620X370X820
- GLOSSY WHITE
- AAA CERAMIC
- P-TRAP:180
- S-TRAP: 100-220
- UF SEAT COVER





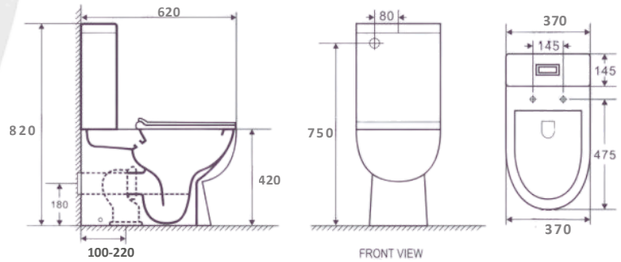

TORNADO 3.0
WASHDOWN TWO-PIECE TOILET
SKU: Q-B-P3093

- 620X365X820
- GLOSSY WHITE
- AAA CERAMIC
- P-TRAP:180
- S-TRAP: 100-220
- UF SEAT COVER





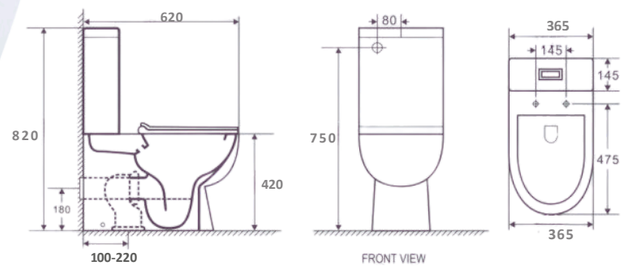



TORNADO TWO-PIECE TOILET

SKU: Q-YJ-8381-TH

- 660X360X855
- GLOSSY WHITE
- AAA CERAMIC
- UF SEAT COVER







FRONT VIEW

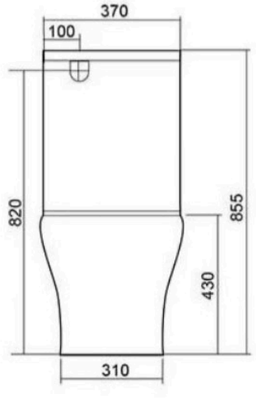

SIDE VIEW

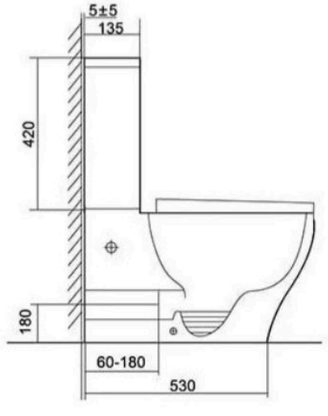

TOP VIEW

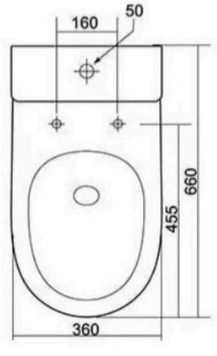

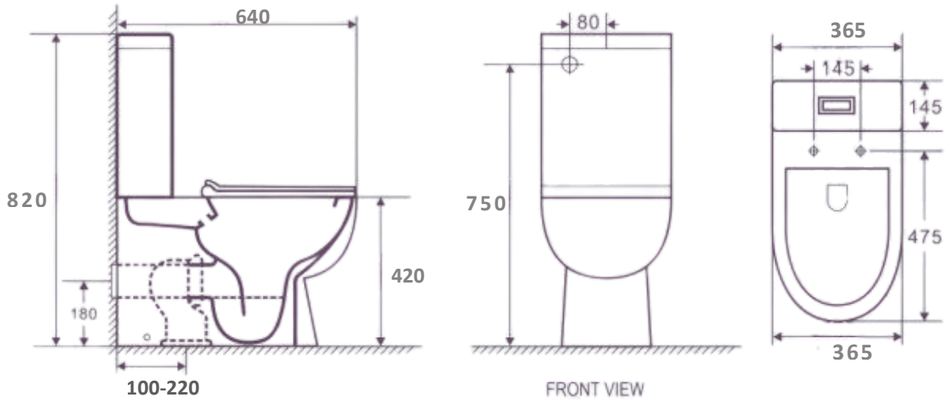



Rimless

WaterMark

WATER RATING 6.5 litres per flush

RIMLESS
WASHDOWN TWO-PIECE TOILET
SKU: Q-B-P3076

- 620X365X820
- GLOSSY WHITE
- AAA CERAMIC
- P-TRAP:180
- S-TRAP: 100-220
- UF SEAT COVER



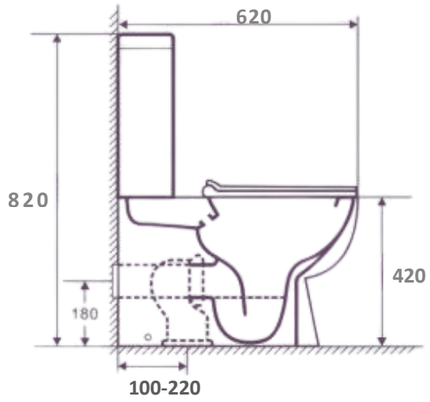



HINGE COVER
BLACK



DUAL FLUSH BUTTON
BLACK

Rimless

WaterMark

WATER RATING 6.5 litres per flush

RIMLESS
WASHDOWN TWO-PIECE TOILET
SKU: Q-B-PM3080-DGA

- 620X370X820
- GLOSSY WHITE
- AAA CERAMIC
- P-TRAP:180
- S-TRAP: 100-220
- UF SEAT COVER











RIMLESS TWO-PIECE TOILET

SKU: Q-YJ-8380-RH

- 645X370X840
- GLOSSY WHITE
- AAA CERAMIC
- UF SEAT COVER

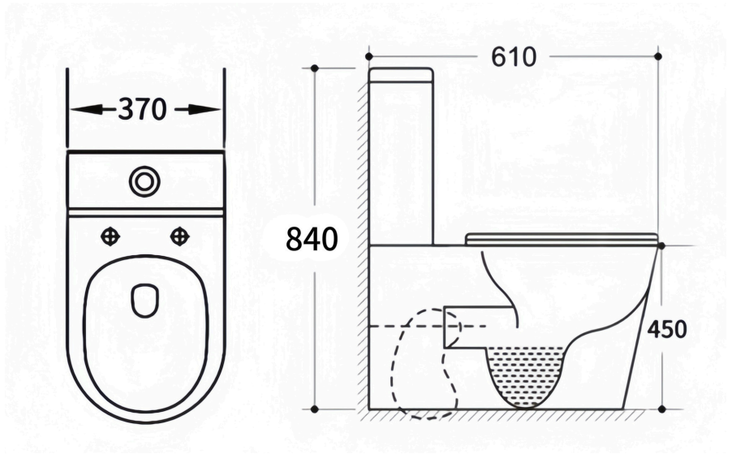



SMART TOILETS

THE DAWN OF INTELLIGENT HYGIENE: REDEFINING THE BATHROOM EXPERIENCE

PREPARE TO ELEVATE YOUR INTIMATE MOMENTS TO A WHOLE NEW REALM OF COMFORT, CLEANLINESS, AND SOPHISTICATED EASE.

OUR NEW LINE OF SMART TOILETS AREN'T JUST ABOUT ADVANCED FEATURES; THEY'RE ABOUT A COMPLETE REIMAGINING OF HYGIENE, WHERE EVERY INTERACTION IS SEAMLESS AND FUNCTIONAL.

WE BELIEVE YOUR BATHROOM SHOULD BE A SANCTUARY - A PLACE WHERE CUTTING-EDGE TECHNOLOGY AND EXQUISITE DESIGN COME TOGETHER TO NURTURE YOUR WELL-BEING. THIS IS MORE THAN JUST A PRODUCT; IT IS A METICULOUSLY CRAFTED STATEMENT. EMBRACE A LIFESTYLE DEFINED BY EFFORTLESS PURITY, EFFORTLESS COMMAND, AND THE ULTIMATE PEACE OF MIND.

WELCOME TO THE FUTURE OF WELL-BEING!





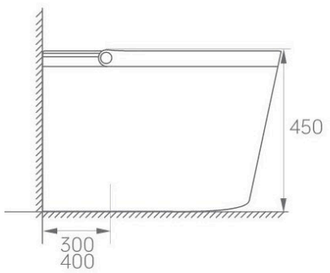

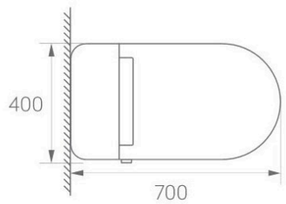

SMART TOILET HIGH VERSION (AUTO-FLIP)
SKU: Q-U5
SIZE: 700X400X450



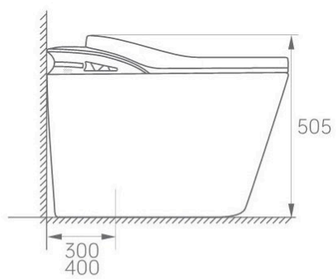

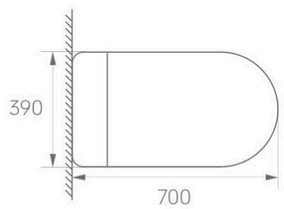

SMART TOILET HIGH VERSION (AUTO-FLIP)
SKU: Q-K2
SIZE: 700X400X505

- **MINIMALISTIC & WALL-HUNG DESIGN:** CLEAN LINES AND A SUSPENDED STRUCTURE FOR A SOPHISTICATED LOOK THAT SAVES SPACE.
- **INTELLIGENT RADAR INDUCTION:** COVER AUTOMATICALLY LIFTS UPON APPROACH FOR A TRULY HANDS-FREE EXPERIENCE.
- **SEAMLESS MALE URINATION:** FOOT SENSOR OPENS THE SEAT, PROVIDING HYGIENIC CONVENIENCE FOR EVERYONE.
- **DOUBLE WATERFALL VORTEX FLUSH:** MAXIMUM CLEANING POWER FOR A CONSISTENTLY PRISTINE BOWL.
- **ADVANCED ULTRAVIOLET STERILIZATION:** BUILT-IN UV LIGHT KILLS UP TO 99.9% OF GERMS TO PROTECT YOUR HEALTH.
- **ELEGANT INTUITIVE CONTROL:** A SIMPLE ONE-KNOB INTERFACE GOVERNS ALL MODES, FROM PERSONALIZED CLEANING TO AIR DRYING.
- **UNCOMPROMISING STRENGTH:** IMPRESSIVE 400KG BEARING CAPACITY FOR LASTING SAFETY AND PEACE OF MIND.





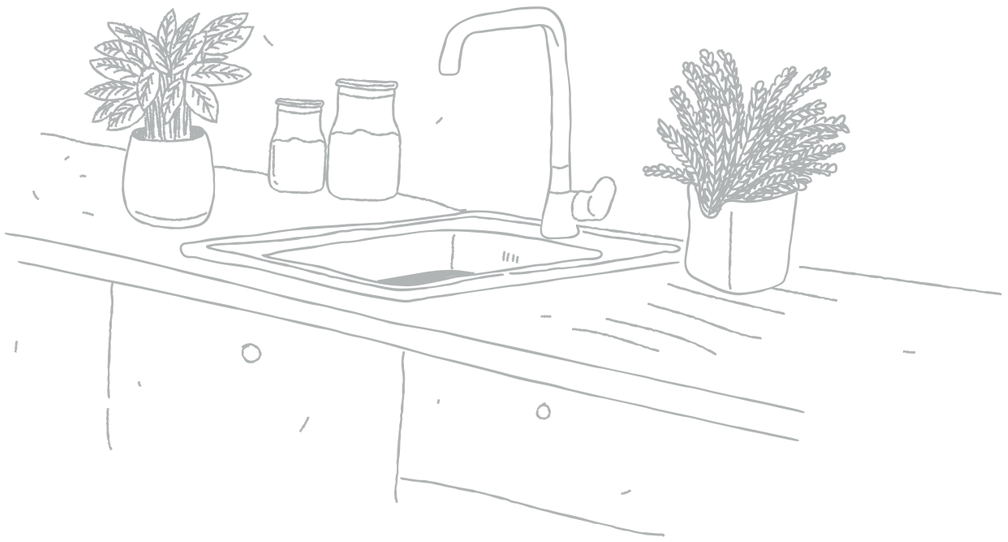

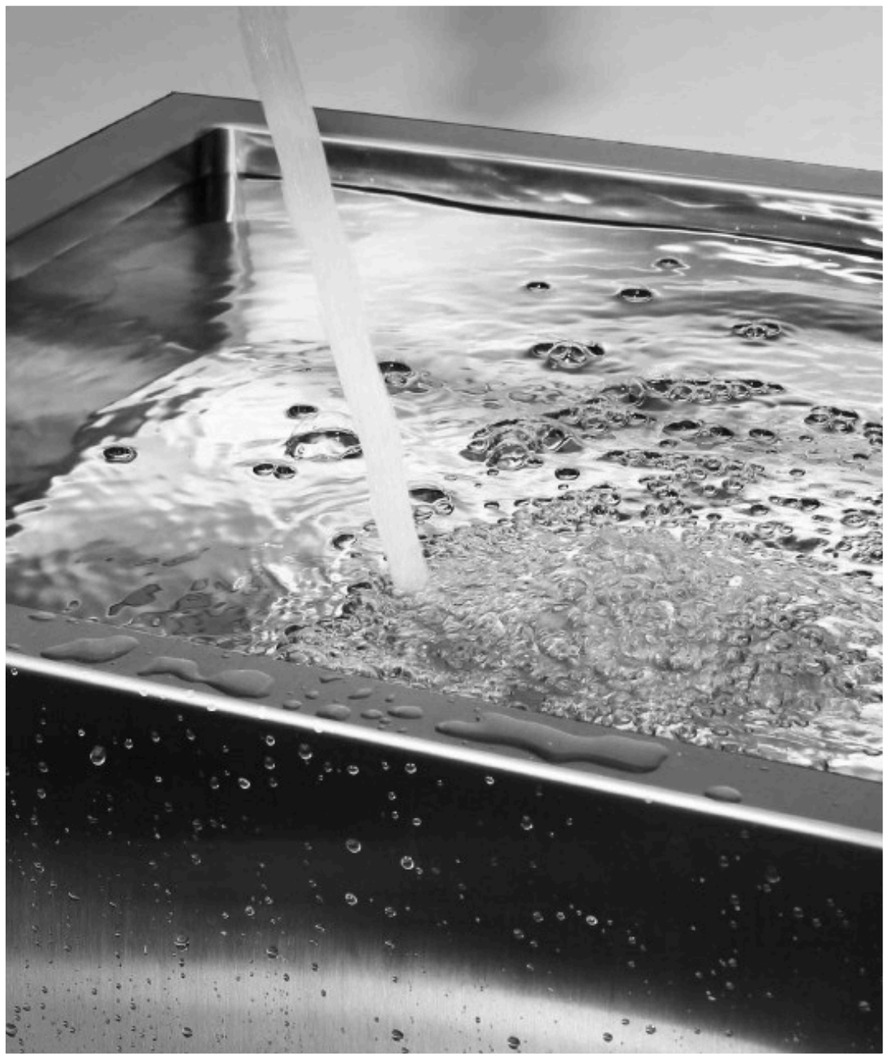



KITCHEN AND LAUNDRY SINKS

SINGLE SINK BOWL (SATIN)

Q-4545 SATIN



Size: 450x450x220mm
Cutout Size (Topmount): 430mmx430mm
Cutout Size (Undermount): 405mmx405mm
1.2mm thickness
Material: SUS304



SINGLE SINK BOWL (BLACK)

Q-4545 BLACK



Size: 450x450x220mm
Cutout Size (Topmount): 430mmx430mm
Cutout Size (Undermount): 405mmx405mm
1.2mm thickness
Material: SUS304

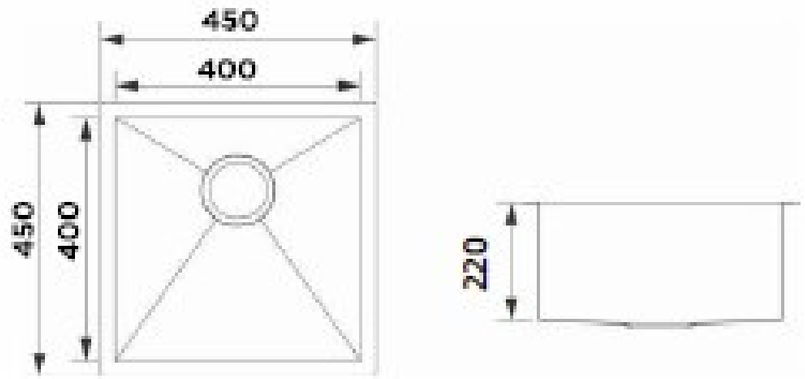

SINGLE SINK BOWL (SATIN)

Q- 7045 SATIN



Size: 700x450x220mm
1.2mm thickness
Material: SUS304

WaterMark



SINGLE SINK BOWL (BLACK)

Q-7045 BLACK



Size: 700x450x220mm
1.2mm thickness
Material: SUS304

WaterMark

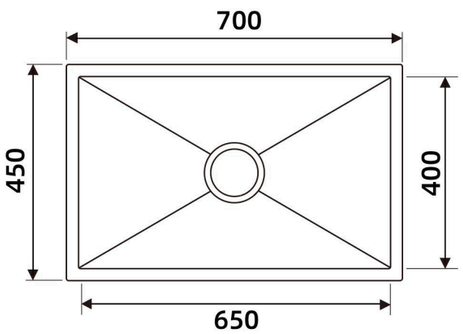







DOUBLE SINK BOWL (SATIN)

Q- 8045 SATIN



800x450x230mm
1.2mm thickness
Material: SUS304

WaterMark

DOUBLE SINK BOWL (BLACK)

Q-8045 BLACK



800x450x230mm
1.2mm thickness
Material: SUS304

WaterMark

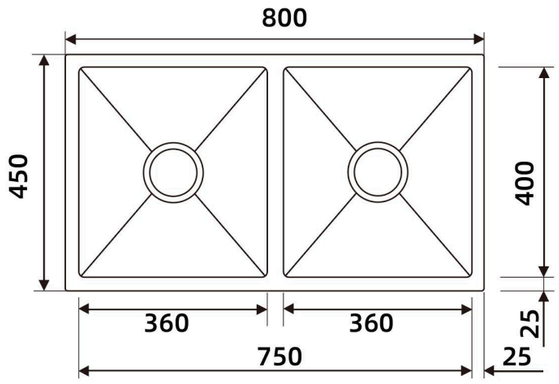

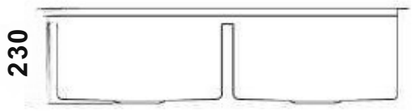



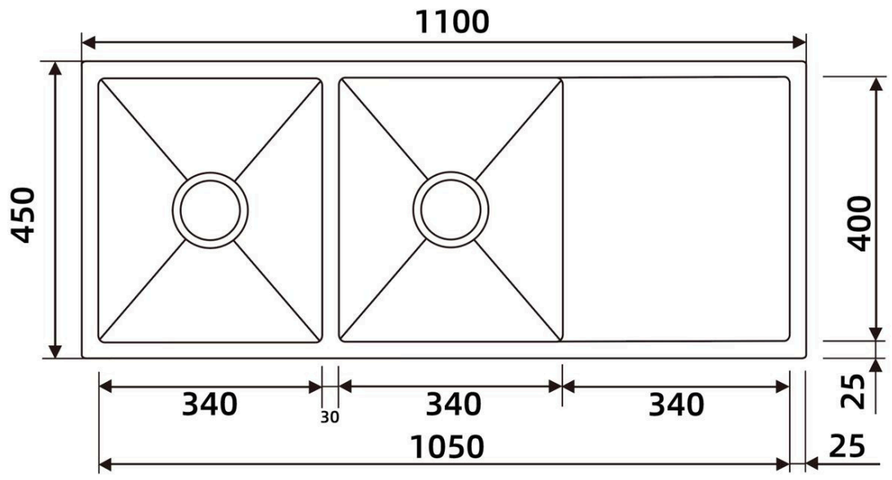

DOUBLE SINK BOWL WITH TRAY (SATIN)

Q- 11045 SATIN



1100x450x230mm
1.2mm thickness
Material: SUS304

WaterMark

DOUBLE SINK BOWL WITH TRAY (BLACK)

Q- 11045 BLACK



1100x450x230mm
1.2mm thickness
Material: SUS304

WaterMark



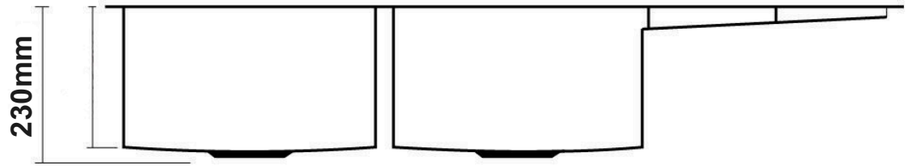

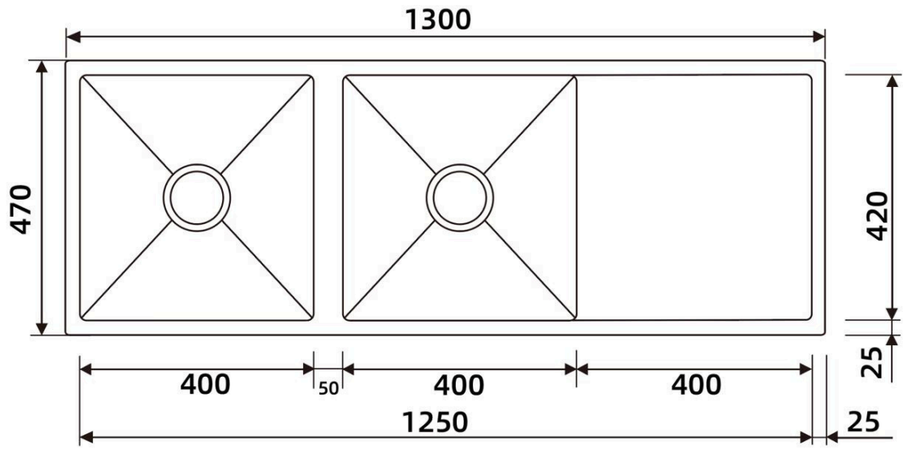

DOUBLE SINK BOWL WITH TRAY (SATIN)

Q-13047 SATIN



1300x470x230mm
1.2mm thickness
Material: SUS304

WaterMark

DOUBLE SINK BOWL WITH TRAY (BLACK)

Q-13047 BLACK



1300x470x230mm
1.2mm thickness
Material: SUS304

WaterMark

SINK DRAINERS



SINK DRAINER (SATIN)

SKU: Q-SINKDRAINER SATIN
MATERIALS: SUS304
SIZE: 114MM
THICKNESS: 0.6MM



SINK DRAINER (BLACK)

SKU: Q-SINKDRAINER BLACK
MATERIALS: SUS304
SIZE: 114MM
THICKNESS: 0.6MM







LED MIRRORS

220V SMART MIRROR

Q-YJ3005-60-B



Size: 600x600x50

- 1 Light
- PVC back board
- No copper silver mirror

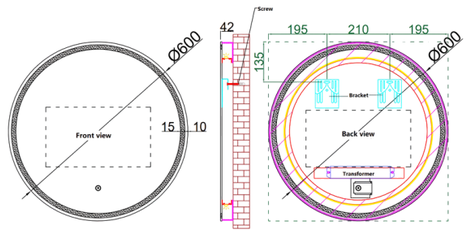

220V SMART MIRROR

Q-YJ3005-60



Size: 600x600x50

- 3 lights
- No Frame
- Defog
- Time & Temperature
- Hand sensor
- No copper silver mirror
- Back light

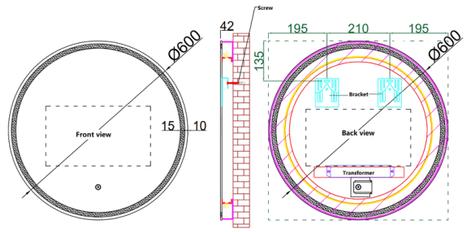

220V SMART MIRROR

Q-YJ3005-80



Size: 800x800x50

- 3 lights
- No Frame
- Defog
- Time & Temperature
- Hand sensor
- No copper silver mirror
- Back light

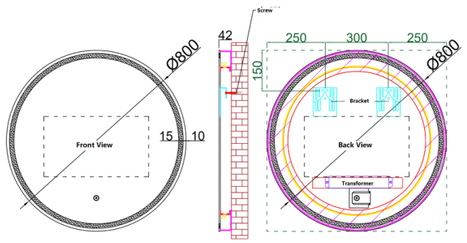

220V SMART MIRROR

Q-YJ1002-80



Size: 800x800x50

- 5mm explosion-proof
- Copper-free silver mirror
- Three colored lights
- Defog
- Time and temperature display
- Bluetooth
- Hand sensor

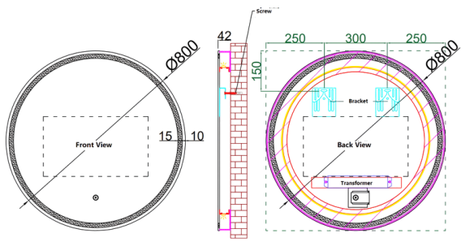

220V SMART MIRROR

Q-YJ3005-60



Size: 600x600x50

- 3 lights
- No Frame
- Defog
- Time & Temperature
- Hand sensor
- No copper silver mirror
- Back light

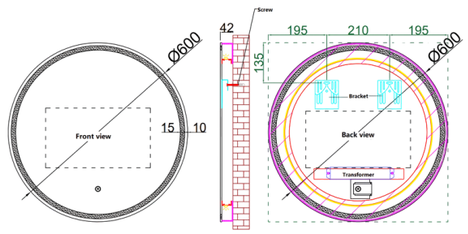

220V SMART MIRROR

Q-YJ1002-60



Size: 600x600x50

- 5mm explosion-proof
- Copper-free silver mirror
- Three colored lights
- Defog
- Time and temperature display
- Bluetooth
- Hand sensor

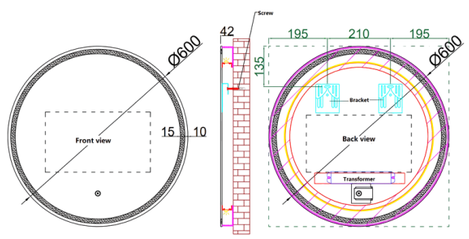

220V SMART MIRROR

Q-YJ3005-80



Size: 800x800x50

- 3 lights
- No Frame
- Defog
- Time & Temperature
- Hand sensor
- No copper silver mirror
- Back light

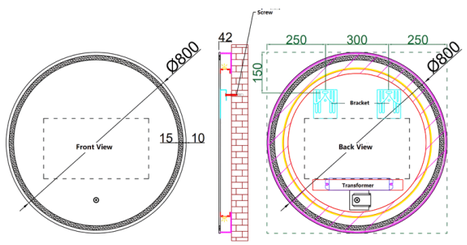

220V SMART MIRROR

Q-YJ1002-80



Size: 800x800x50

- 5mm explosion-proof
- Copper-free silver mirror
- Three colored lights
- Defog
- Time and temperature display
- Bluetooth
- Hand sensor

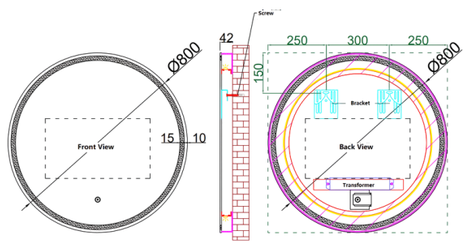

220V SMART MIRROR

Q-YJ-7090H

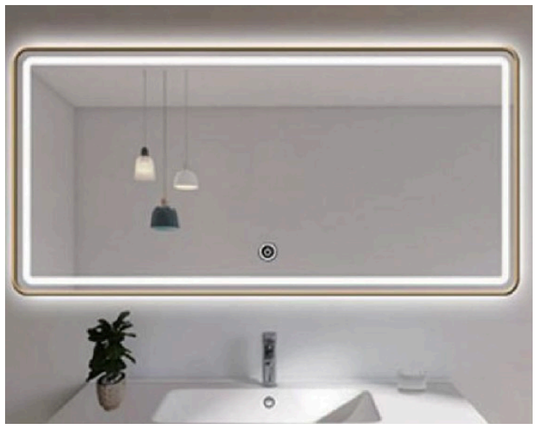

Size: 700x900x50

- 5mm explosion-proof
- Copper-free silver mirror
- Three colored lights
- Defog
- Time and temperature display
- Bluetooth
- Magnifying glass
- Hand sensor
- Silver, black and Gold frame

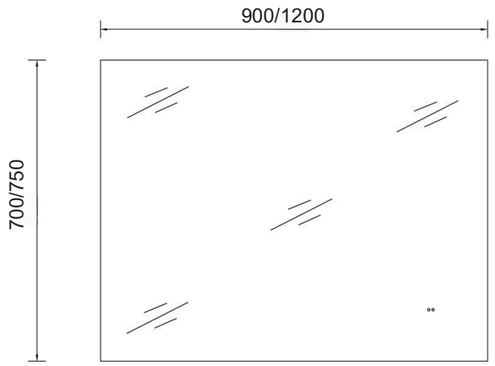

220V SMART MIRROR

Q-YJ-75120H

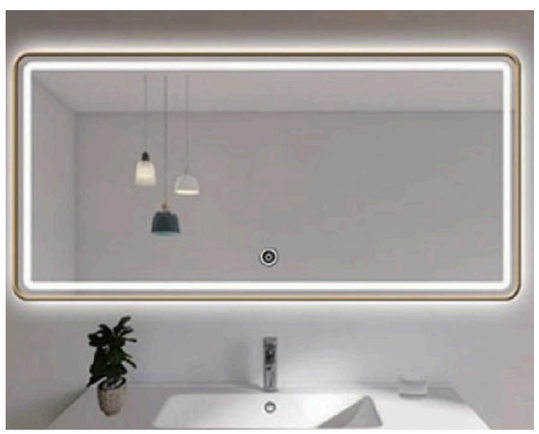

Size: 750x1200x50

- 5mm explosion-proof
- Copper-free silver mirror
- Three colored lights
- Defog
- Time and temperature display
- Bluetooth
- Magnifying glass
- Hand sensor
- Silver, black and Gold frame

220V SMART MIRROR

Q-YJ-5090-SLV
Q-YJ-5090-GLD
Q-YJ-5090-BLK



Size: 500x900x50

- 3 light
- Defog
- Time & Temperature display
- Hand sensor
- No copper silver mirror
- Back light
- PVC Back Board
- Silver, black and Gold frame

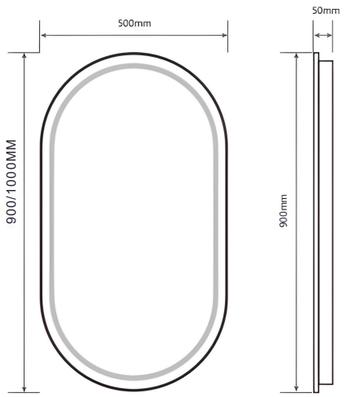

220V SMART MIRROR

Q-YJ-50100-SLV
Q-YJ-50100-GLD
Q-YJ-50100-BLK



Size: 500x1000x50

- 3 light
- Defog
- Time & Temperature display
- Hand sensor
- No copper silver mirror
- Back light
- PVC back board
- Silver, black and Gold frame



Contact Us

info@kajariatiles.com.au
www.kajariatiles.com.au

Warehouse

8 and 10 Merola Way, Campbellfield VIC 3061
Tel: 03 8759 5042

Showroom

1/1812 Sydney Road, Campbellfield VIC 3061
Mob: +61 450 040 215
Mob: +61 405 445 243
Tel: 03 8759 5042



Kajaria Tiles
AUSTRALIA

QBISA
QUALITY BUILDING & INDUSTRIAL SUPPLIES AUSTRALIA